AGROSAL d.o.o.

BCS

600

AGROSAL d.o.o.
Gregorčičeva ulica 38, 5270 Ajdovščina
telefon: 05 368 90 96, fax: 05 368 90 97
e-mail: info@agrosal.si, www.agrosal.si

IT1	INDICE DELLE TAVOLE *INDEX OF TABLES* *REPERTOIRE DES PLANCHES* *INDICE DE FIGURAS* *TAFELVERZEICHNIS*
IT2	INDICE DELLE TAVOLE *INDEX OF TABLES* *REPERTOIRE DES PLANCHES* *INDICE DE FIGURAS* *TAFELVERZEICHNIS*
IC1	INDICE DEI CODICI *PART NUMBER INDEX* *INDEX DES REFERENCES* *INDICE DE LOS CODIGOS* *INDEX DER TEILNUMMERN*
IC2	INDICE DEI CODICI *PART NUMBER INDEX* *INDEX DES REFERENCES* *INDICE DE LOS CODIGOS* *INDEX DER TEILNUMMERN*
IC3	INDICE DEI CODICI *PART NUMBER INDEX* *INDEX DES REFERENCES* *INDICE DE LOS CODIGOS* *INDEX DER TEILNUMMERN*
IC4	INDICE DEI CODICI *PART NUMBER INDEX* *INDEX DES REFERENCES* *INDICE DE LOS CODIGOS* *INDEX DER TEILNUMMERN*
IC5	INDICE DEI CODICI *PART NUMBER INDEX* *INDEX DES REFERENCES* *INDICE DE LOS CODIGOS* *INDEX DER TEILNUMMERN*
IC6	INDICE DEI CODICI *PART NUMBER INDEX* *INDEX DES REFERENCES* *INDICE DE LOS CODIGOS* *INDEX DER TEILNUMMERN*
IC7	INDICE DEI CODICI *PART NUMBER INDEX* *INDEX DES REFERENCES* *INDICE DE LOS CODIGOS* *INDEX DER TEILNUMMERN*
IC8	INDICE DEI CODICI *PART NUMBER INDEX* *INDEX DES REFERENCES* *INDICE DE LOS CODIGOS* *INDEX DER TEILNUMMERN*
01	CARROZZERIA (600-610-620-630-630WS2) *BODY* *CAROSSERIE* *CARROCERIA* *KAROSSERIE*
01A	RIPARI MOTORE (615-615L-615S-650) *ENGINE GUARDS* *PROTECTIONS MOTEUR* *PROTECCIONES MOTOR* *MOTOR SCHUTZ*
01B	AVVIAMENTO ELETTRICO (650) *ELECTRIC STARTER* *DÉMARRAGE ÉLECTRIQUE* *ARRANQUE ELECTRICO* *ELEKTROSTART*
02	FRIZIONE A CONO AUTOVENTILANTE *CLUTCH* *EMBRAYAGE* *EMBRAGUE* *KUPPLUNG*
02A	FRIZIONE (610) *CLUTCH* *EMBRAYAGE* *EMBRAGUE* *KUPPLUNG*
03	SCATOLA CAMBIO (600-620-630-650) *GEARBOX* *BOITE DE VITESSES* *CAJA DE CAMBIO* *WECHSELGETRIEBE*
03A	SCATOLA CAMBIO (610-615-615L-615S) *GEARBOX* *BOITE DE VITESSES* *CAJA DE CAMBIO* *WECHSELGETRIEBE*
03B	SCATOLA CAMBIO (630WS2) *GEARBOX* *BOITE DE VITESSES* *CAJA DE CAMBIO* *WECHSELGETRIEBE*
04	INGRANAGGI CAMBIO (600-620-630-630WS2-650) *GEARS* *ENGRANAGES* *ENGRANAJES* *ZAHNRÄDER*
04A	INGRANAGGI CAMBIO (610-615) *GEARS* *ENGRANAGES* *ENGRANAJES* *ZAHNRÄDER*
04B	INGRANAGGI CAMBIO (615L-615S) *GEARS* *ENGRANAGES* *ENGRANAJES* *ZAHNRÄDER*
05	ASSE RUOTE (600-610-615-615L-615S-620) *WHEELS AXLE* *ESSIEU ROUES* *EJE RUEDAS* *RÄDACHSE*
05A	ASSE RUOTE (630WS) *WHEELS AXLE* *ESSIEU ROUES* *EJE RUEDAS* *RÄDACHSE*
05B	ASSE RUOTE (630WS) *WHEELS AXLE* *ESSIEU ROUES* *EJE RUEDAS* *RÄDACHSE*
05C	ASSE RUOTE (630WS2) *WHEELS AXLE* *ESSIEU ROUES* *EJE RUEDAS* *RÄDACHSE*
05D	ASSE RUOTE (630WS2) *WHEELS AXLE* *ESSIEU ROUES* *EJE RUEDAS* *RÄDACHSE*
06	DIFFERENZIALE (630) *DIFFERENTIAL* *DIFFÉRENTIEL* *DIFFERENCIAL* *DIFFERENTIAL*
06A	DIFFERENZIALE (650) *DIFFERENTIAL* *DIFFÉRENTIEL* *DIFFERENCIAL* *DIFFERENTIAL*

AGROSAL d.o.o.

07	PIANTONE (600-610-620-630-630WS2) *STEERING COLUMN* *PLANTON* *COLUMNA* *LENKSÄULE*	
07A	PIANTONE (650) *STEERING COLUMN* *PLANTON* *COLUMNA* *LENKSÄULE*	
07B	PIANTONE (615-615L-615S) *STEERING COLUMN* *PLANTON* *COLUMNA* *LENKSÄULE*	
08	MANUBRIO (600-610-620-630) *HANDLEBAR* *MANCHERON* *MANILLAR* *LENKER*	
08A	MANUBRIO (630WS) *HANDLEBAR* *MANCHERON* *MANILLAR* *LENKER*	
08B	MANUBRIO (650) *HANDLEBAR* *MANCHERON* *MANILLAR* *LENKER*	
08C	MANUBRIO (615-615L-615S) *HANDLEBAR* *MANCHERON* *MANILLAR* *LENKER*	
08D	MANUBRIO (630WS2) *HANDLEBAR* *MANCHERON* *MANILLAR* *LENKER*	
09	COMANDI (600-610-620-630-630WS2) *CONTROLS* *COMMANDES* *MANDOS* *ANTRIEBE*	
09A	COMANDI (615-615L-615S) *CONTROLS* *COMMANDES* *MANDOS* *ANTRIEBE*	
10	FRENI (630-630WS-650) *BRAKES* *FREINS* *FRENOS* *BREMSEN*	
11	RUOTE *WHEELS* *ROUES* *RUEDAS* *RÄDER*	
12	ADESIVI *STICKERS* *AUTOCOLLANTS* *ADHESIVOS* *AUFKLEBES*	
13	ADESIVI *STICKERS* *AUTOCOLLANTS* *ADHESIVOS* *AUFKLEBES*	

AGROSAL d.o.o.

codice	denominazione	tavola
300.00001	INGRASSATORE M10	07A/2 07A/3
300.00276	CHIAVE INTERR 14109108 COBO	01A/0 01A/1 01A/2 01B/0
300.00277	INTERR AVV 14.111.000.11 2/CH	01A/0 01A/1 01A/2 01B/0
300.00628	PASSACAVO 90/200/30 SH50-55	001/2 001/3
300.00634	MICROINT. STOP COMPL	08A/0 08A/1 08A/2
300.00635	DADO ESAG 1/4 OTTONE 10030	08A/0 08A/1 08A/2
300.00636	CAPPUCCIO PER MICRO 3015863CEV	08A/0 08A/1 08A/2
300.10103	SIL/BL 10,2X30X45X60,5 SP.	08C/0 08C/1
300.10120	SIL/BL 12X40X58X66-47602	007/2 007/3 07A/0 07A/1
		07A/2 07A/3
300.10142	SIL/BL 10,2X30X45X49 SP.	009/0 009/1
300.30011	BOCCOLA A/LUB 12X14X10 BMC1210	05A/0 05C/0 05C/1 05C/2
		05C/3
300.30016	BOCCOLA A/LUBR 18x25x25 BR C/C	05D/0 05D/1 05D/2
300.40001	TAPPO 1/4 UNI 364	003/0 003/1 003/2 003/3
		03A/0 03A/1 03A/2 03B/0
		05D/0 05D/1 05D/2
300.40050	TERMINALE RETTANGOLARE 50X40	007/0 007/1
300.40133	TAPPO 22 DIN 470 DA ZINCARE	03A/0 03A/1 03A/2
311.00003	VITE TE 5/16X7/8 UNF 2A AC 8G	002/3 002/4
311.00015	VITE TE 3/8X1" UNC ACC.8G	002/0 002/1 002/2 002/3
		002/4
311.00786	VITE STEI M8X30 UNI 5923 8G	002/0 002/1 002/2 002/3
		002/4
311.11086	VITE TE M4X25 UNI 5739 8G	008/0 008/1 008/2 008/3
		008/4 08B/0 08B/1 08B/2
		08B/3 08C/0 08C/1 08D/0
		08D/1
311.11089	VITE TE M5X10 UNI 5739 8G	05D/0 05D/1 05D/2
311.11090	VITE TE M6X10 UNI 5739 8G	002/1 002/2 003/0 003/1
		003/2 003/3 03A/1 03A/2
		03B/0
311.11091	VITE TE M6X14 UNI 5739 8G	008/0 08C/0 08C/1
311.11092	VITE TE M6X20 UNI 5739 5S	008/1
311.11097	VITE TE M6X45 UNI 5737 8G	008/0 008/1 008/2 008/3
		008/4 08A/0 08A/1 08A/2
		08B/0 08B/1 08B/2 08B/3
		08C/0 08C/1 08D/0 08D/1
311.11151	VITE TE M8X16 UNI 5739 8G	001/0 001/1 001/2 001/3
		001/4 001/5 01A/0 01A/1
		01A/2 01A/3 07A/0 07A/1
		07A/2 07A/3
311.11216	VITE TE M10X70 UNI 5739 8G	009/0 009/1
311.11225	VITE TE M10X90 UNI 5737 8G	07A/0 07A/1 07A/2 07A/3
311.11229	VITE TE M10X110 UNI 5737 8G	007/0 007/1 007/2 007/3
311.12051	VITE TE M5X14 UNI 5739 8G	05B/0
311.12086	VITE TE M6X30 UNI 5737 8G	08A/0 08A/1 08A/2
311.12089	VITE TE M6X25 UNI 5739 8G	008/0 008/1 008/2 008/3
		008/4 010/0 010/1 010/2
		08B/0 08B/1 08B/2 08B/3
		08C/0 08C/1 08D/0 08D/1
311.12090	VITE TE M6X16 UNI 5739 8G	010/0 010/1 010/2 05B/0
311.12092	VITE TE M6X35 UNI 5739 8G	008/0 008/2 008/3 008/4
		010/0 010/1 010/2 08A/0
		08A/1 08A/2 08B/0 08B/1
		08B/2 08B/3 08D/0 08D/1
311.12147	VITE TE M8X18 UNI 5739 8G	005/3
311.12148	VITE TE M8X14 UNI 5739 8G ZNT	07A/0 07A/1 07A/2 07A/3
311.12149	VITE TE M8X12 UNI 5739 8G	011/1 011/2 011/3 011/4
		07A/0 07A/1 07A/2 07A/3
311.12150	VITE TE M8X20 UNI 5739 8G	001/0 001/1 001/2 001/3
		001/4 001/5 05D/0 05D/1
		05D/2 09A/0
311.12151	VITE TE M8X25 UNI 5739 8G	003/1 003/2 003/3 011/4
		05D/0 05D/1 05D/2
311.12152	VITE TE M8X30 UNI 5739 8G	006/0 03A/0 03A/1 03A/2
		05A/0 05C/0 05C/1 05C/2
		05C/3 05D/0 05D/1 05D/2
		06A/0 09A/0

codice	denominazione	tavola
311.12153	VITE TE M8X35 UNI 5739 8G	007/0 007/1 007/2 007/3
		008/0 008/1 008/2 008/3
		008/4 05A/0 05C/1 05C/2
		05D/1 05D/2 07A/0 07A/1
		08A/0 08A/1 08A/2 08B/0
		08B/1 08B/2 08B/3 08C/0
		08C/1 08D/0 08D/1
311.12154	VITE TE M8X40 UNI 5739 8G	001/0 001/1 001/2 001/3
		001/4 001/5 01A/0 01A/1
		01A/2 01A/3 07A/2 07A/3
311.12210	VITE TE M10X20 UNI 5739 8G	03A/1 03A/2
311.12211	VITE TE M10X30 UNI 5739 8G	004/0 004/1 004/2 004/3
		004/4 007/0 007/1 007/2
		007/3 04B/0
311.12213	VITE TE M10X40 UNI 5739 8G	001/0 001/1 001/2 001/3
		001/4 001/5 01A/3
311.12217	VITE TE M10X80 UNI 5737 8G	07B/0 08C/0 08C/1
311.12219	VITE TE M10X25 UNI 5739 8G	003/2 003/3 011/4
311.12271	VITE TE M12X25 UNI 5739 8G	05C/1 05C/2
311.12272	VITE TE M12X30 UNI 5739 8G	05C/3
311.12294	VITE TE M12X85 UNI 5737 8G	07B/0
311.12295	VITE TE M12X90 UNI 5737 8G	007/2 007/3 07A/0 07A/1
		07A/2 07A/3
311.21007	VITE TBCEI M8X20 ISO 7380 8G	001/3 001/4 001/5
311.21010	VITE TBCEI M6X25 ISO 7380 8G	08A/0 08A/1 08A/2
311.21558	VITE TTQ M6X16 UNI 5731 5S ZNT	01B/0
311.32562	VITE TSVEI M6X16 UNI 5933	03A/0 03A/1 03A/2
311.52044	VITE TCEI M4X35 UNI 5931 8G	08A/0 08A/1 08A/2 08D/0
		08D/1
311.52060	VITE TCEI M6X30 UNI 5931 8G	02A/0
311.52063	VITE TCEI M6X20 UNI 5931 8G	08A/0 08A/1 08A/2 08D/0
		08D/1
311.52065	VITE TCEI M6X40 UNI 5931 8G	08A/0 08A/1 08A/2 08D/0
		08D/1
311.52085	VITE TCEI M8X25 UNI 5931 8G	010/0 010/1 010/2 02A/0
		05B/0
311.52103	VITE TCEI M10X25 UNI 5931 8G	003/1 003/2 003/3 03A/1
		03A/2
311.61043	VITE TC M4X30 UNI 6107 5S	01A/0 01A/1 01A/2
312.01212	DADO M12 UNI 5593 6S ZB	09A/0
312.11040	DADO M4 UNI 5588 6S	008/0 008/1 008/2 008/3
		008/4 01A/0 01A/1 01A/2
		08B/0 08B/1 08B/2 08B/3
		08C/0 08C/1 08D/0 08D/1
312.11060	DADO M6 UNI 5588 6S	01A/0 01A/1 01A/2 07A/0
		07A/1 07A/2 07A/3 08A/0
		08A/1 08A/2
312.11080	DADO M8 UNI 5588 6S	001/0 001/1 001/2 002/0
		002/1 002/2 002/3 002/4
		007/0 007/1 007/2 008/0
		008/1 008/2 008/3 008/4
		010/0 010/1 010/2 08A/0
		08A/1 08A/2 08B/0 08B/1
		08B/2 08B/3 08C/0 08C/1
		08D/0 08D/1
312.11100	DADO M10 UNI 5588 6S	003/1 005/0 005/1 005/2
		005/3 006/0 011/0 011/1
		011/2 011/3 011/4 05B/0
		05D/0 05D/1 05D/2 06A/0
312.21121	DADO M12X1,25 UNI 5587 6S	003/0 003/1 003/2 003/3
		03A/0 03A/1 03A/2 03B/0
312.41041	DADO AUTOBL M4 6S DEFORM	08A/0 08A/1 08A/2 08D/0
		08D/1
312.41060	DADO AUTOBL M6 ALTO DIN 982	008/0 008/1 008/2 008/3
		008/4 01A/0 01A/1 01A/2
		01B/0 010/0 010/1 010/2
		08A/0 08A/1 08A/2 08B/0
		08B/1 08B/2 08B/3 08C/0
		08C/1 08D/0 08D/1

BCS

600 serie 94

INDICE DEI CODICI

PART NUMBER INDEX
INDICE DE LOS CODIGOS
INDEX DES REFERENCES
INDEX DER TEILNUMMERN

IC1 Rev. 0

1/2004

2ENNE

AGROSAL d.o.o.

codice	denominazione	tavola
312.41061	DADO AUTOBL M6 6S DEFORM	008/0 008/1 008/2 008/3
		008/4
312.41080	DADO AUTOBL M8	001/0 001/1 001/2 001/3
		001/4 001/5 003/0 003/1
		003/2 003/3 006/0 007/0
		007/1 007/2 007/3 01A/0
		01A/1 01A/2 01A/3 01B/0
		011/4 03A/0 03A/1 03A/2
		03B/0 06A/0 07A/0 07A/1
		07A/2 07A/3 08A/0 08A/1
		08A/2 08C/0 08C/1 09A/0
312.41085	DADO AUTOBL M8 6S DEFORM	003/0 003/1 003/2 003/3
		009/0 009/1 009/2 009/3
		009/4 03A/0 03A/1 03A/2
		03B/0 05B/0 09A/0
312.41100	DADO AUTOBL M10	001/0 001/1 001/2 001/3
		001/4 001/5 007/0 007/1
		007/2 007/3 009/0 009/1
		01A/3 011/4 05D/1 05D/2
		07B/0 08C/0 08C/1
312.41101	DADO AUTOBL M10 BASSO	07A/0 07A/1 07A/2 07A/3
312.41120	DADO AUTOBL M12	005/0 005/1 005/2 005/3
		011/4 07B/0
312.41121	DADO AUTOBL M12 BASSO	007/2 007/3 07A/0 07A/1
		07A/2 07A/3
313.12078	PRIG M8X32X14X14 8G	03B/0
313.12080	PRIG M8X46X20X12 8G	006/0 06A/0
313.12082	PRIG M8X38X14X20 8G	003/0 003/1 003/2 003/3
		009/0 009/1 009/2 009/3
		009/4 03A/0 03A/1 03A/2
		09A/0
313.12083	PRIG M8X46X16X16 8G	002/1 002/2 002/3 002/4
313.12084	PRIG M8X58X16X16 8G	003/0 003/1 003/2 003/3
		03B/0
313.12085	PRIG M8X80X28X16 8G	003/2 03B/0
313.12086	PRIG M8X56X20X14 8G	03A/0 03A/1 03A/2
313.12088	PRIG M8X40X14X14 8G	002/0 002/1 002/2 002/3
		002/4 03B/0
313.12094	PRIG M8X68X14X36 8G	003/0 003/1 003/2 003/3
		03A/0 03A/1 03A/2
313.12101	PRIG M10X37X15X19 8G	003/1
313.12102	PRIG M10X40X24X12 8G	005/0 005/1 005/2 005/3
		006/0 011/0 011/1 011/2
		05B/0 05D/0 05D/1 05D/2
		06A/0
313.12103	PRIG M10X46X24X16 8G	011/3 011/4
313.12124	PR.52XM12X1,25X22XM12X22 8G	003/0 003/1 003/2 003/3
		03A/0 03A/1 03A/2
313.12125	PR.64XM12X1,25X26XM12X30 8G	003/1 003/2 003/3 03A/1
		03A/2 03B/0
314.00190	SPESSORE SS 26x37/2 DIN 988	05D/0 05D/1 05D/2
314.00192	SPESSORE PS 30x42/1,5 DIN 988	05D/0 05D/1 05D/2
314.11043	ROSETTA 4,3X9 UNI 6592	008/0 008/1 008/2 008/3
		008/4 08B/0 08B/1 08B/2
		08B/3 08C/0 08C/1 08D/0
		08D/1
314.11064	ROSETTA 6,4x12,5 UNI 6592	002/1 002/2 008/1 008/2
		008/3 008/4 01A/0 01A/1
		01A/2 08A/0 08A/1 08A/2
		08B/0 08B/1 08B/2 08B/3
		08C/0 08C/1
314.11066	ROSETTA 6,6x18 UNI 6593 ACC	001/0 001/1
314.11084	ROSETTA 8,4x17 UNI 6592	001/0 001/1 001/2 001/3
		001/4 001/5 006/0 008/0
		008/1 008/2 008/3 008/4
		01A/0 01A/1 01A/2 01A/3
		06A/0 07A/0 07A/1 07A/2
		07A/3 08B/0 08B/1 08B/2
		08B/3

codice	denominazione	tavola
314.11090	ROSETTA 9x24 UNI 6593	05D/0 05D/1 05D/2
314.11104	ROSETTA 10,5x18 UNI 6592	001/0 001/1 001/2 001/3
		001/4 001/5 009/0 009/1
		009/2 009/3 009/4 01A/3
		07A/0 07A/1 07A/2 07A/3
		09A/0
314.14130	ROSETTA 13 UNI 1749 ACC.	07A/2 07A/3
314.21062	SUPER RANELLA 5 DIN 6796 ZNT	05B/0
314.21083	SUPER RANELLA 8 DIN 6796 ZNT	001/0 001/1 001/2 001/3
		001/4 001/5 003/0 003/1
		003/2 003/3 009/0 009/1
		009/2 009/3 009/4 01B/0
		03A/0 03A/1 03A/2 03B/0
		05A/0 05B/0 05C/0 05C/1
		05C/2 05C/3 05D/0 05D/1
		05D/2 07A/0 07A/1 07A/2
		07A/3 09A/0
314.21101	SUPER RANELLA 10 DIN 6796 ZNT	004/0 004/1 004/2 004/3
		004/4 011/4 03A/1 03A/2
		04B/0 05D/0 05D/1 05D/2
314.21130	SUPER RANELLA 12 DIN 6796 ZNT	005/0 005/1 005/2 005/3
		05C/1 05C/2 05C/3 07B/0
314.21132	ROSETTA CONICA 13X24X2,8 ACC.	003/2 003/3 03A/2 03B/0
314.22064	ROSETTA EL 6,4 DIN 137-A	003/0 003/1 003/2 003/3
		010/0 010/1 010/2 02A/0
		03A/1 03A/2 03B/0
314.23043	ROSETTA EL 4,3 DIN 137-B ACC	008/0 008/1 008/2 008/3
		008/4 01A/0 01A/1 01A/2
		08B/0 08B/1 08B/2 08B/3
		08C/0 08C/1 08D/0 08D/1
314.23084	ROSETTA EL 8,4 DIN 137-B	001/0 001/1 001/2 001/3
		001/4 001/5 002/0 002/1
		002/2 002/3 002/4 003/0
		003/1 003/2 003/3 006/0
		007/0 007/1 007/2 007/3
		008/0 008/1 008/2 008/3
		008/4 01A/0 01A/1 01A/2
		01A/3 01B/0 011/1 011/2
		011/3 011/4 03A/0 03A/1
		03A/2 03B/0 05B/0 06A/0
		07A/0 07A/1 07A/2 07A/3
		08A/0 08A/1 08A/2 08B/0
		08B/1 08B/2 08B/3 08C/0
		08C/1 08D/0 08D/1 09A/0
314.23105	ROSETTA EL 10,5 DIN 137-B	002/0 002/1 002/2 002/3
		002/4 003/1 005/0 005/1
		005/2 005/3 006/0 009/0
		009/1 011/0 011/1 011/2
		011/3 011/4 05B/0 05D/0
		05D/1 05D/2 06A/0 07A/0
		07A/1 07A/2 07A/3 07B/0
		08C/0 08C/1
314.23130	ROSETTA EL 13 DIN 137-B	003/0 003/1 007/2 007/3
		011/4 03A/0 03A/1 07A/0
		07A/1 07A/2 07A/3 09A/0
314.24084	ROSETTA EL 8,4 UNI 1751-A	005/3
314.31054	ROSETTA DENT 6 UNI 3703-DE	08A/0 08A/1 08A/2
314.40004	ROSETTA ELASTICA PERNI D4	07A/0 07A/1 07A/2 07A/3
315.10100	VITE A/F TE M6,3X19 UNI 6950/B	001/0 001/1 001/2 001/3
		001/4 001/5
315.10640	VITE A/F 6,3X32 UNI 6950 B	001/0 001/1
341.10020	COPIGLIA A2,0X12 UNI 1336 ZINC	008/4
341.10028	COPIGLIA A3,0X15 UNI 1336 ZINC	009/0 009/1 009/2 009/3
		009/4 07A/0 07A/1 07A/2
		07A/3 09A/0
341.10030	COPIGLIA A3,0X20 UNI 1336 ZINC	05D/0 05D/1 05D/2
342.11025	SPINA ELAST.2,5X22 DIN 1481	04A/0 04A/1 04A/2
342.11028	SPINA ELAST.3,0X18 DIN 1481	07B/0
342.11029	SPINA ELAST.3,0X16 DIN 1481 AC	009/0 009/1 009/2 009/3

AGROSAL d.o.o.

codice	denominazione	tavola
		009/4
342.11040	SPINA ELAST.4X20 DIN 1481	08B/1 08B/2 08B/3
342.11041	SPINA ELAST.4X35 DIN 1481	07B/0
342.11042	SPINA ELAST.4X25 DIN 1481	004/0 004/1 004/2 004/3
		004/4 04B/0
342.13020	SPINA ELAST.4X20 SPIROL 6876	008/0 008/1 008/2 008/3
		008/4 009/0 009/1 009/2
		009/3 009/4 05B/0 07A/0
		07A/1 07A/2 07A/3 08A/0
		08A/1 08A/2 08B/0 08B/1
		08B/2 08B/3 08C/0 08C/1
		08D/0 08D/1 09A/0
342.13022	SPINA ELAST.3,0X22 SPIROL 6876	07A/0 07A/1 07A/2 07A/3
		09A/0
342.13024	SPINA ELAST.4X24 SPIROL 6876	07A/0 07A/1 07A/2 07A/3
		09A/0
342.13060	SPINA ELAST.6X24 SPIROL 6876	004/0 004/1 004/2 004/3
		004/4 04A/0 04A/1 04A/2
		04B/0
342.13061	SPINA ELAST.6X20 SPIROL 6876	004/0 004/1 004/2 004/3
		004/4 04A/0 04A/1 04A/2
		04B/0 09A/0
342.21056	SPINA CILIND 6X20 UNI 1707	05D/0
342.21070	SPINA CILIND 8X50 UNI 1707 C30	07B/0
343.11040	LINGUETTA 4X6,5 UNI 6606	05D/0 05D/1 05D/2
343.11060	LINGUETTA 6X10 UNI 6606	005/0 005/1 005/2 005/3
351.11047	ANELLO SEEGER I 47 DIN 472	006/0 06A/0
351.11052	ANELLO SEEGER I 52 DIN 472	005/0 005/1 005/2 005/3
		04A/0 04A/1 04A/2 04B/0
		05A/0 05B/0 05C/0 05C/1
		05C/2 05C/3
351.11053	ANELLO SEEGER I 52 UNI 7438	004/0 004/1 004/2 004/3
		004/4
351.11055	ANELLO SEEGER I 55 DIN 472	004/0 004/1 004/2 004/3
		004/4 04A/0 04A/1 04A/2
		04B/0
351.21024	ANELLO SEEGER E 24 DIN 471	05A/0 05C/0 05C/1 05C/2
		05C/3 05D/0 05D/1 05D/2
351.21026	ANELLO SEEGER E 26 DIN 471	05D/0 05D/1 05D/2
351.21030	ANELLO SEEGER E 30 DIN 471	05D/0 05D/1 05D/2
351.21031	ANELLO SEEGER E 30 UNI 7436	004/0 004/1 004/2 004/3
		004/4 04A/0 04A/1 04A/2
		04B/0
351.31026	ANELLO SEEGER E 25X2 UNI 7436	05B/0
352.11070	ANELLO SEEGER E 7 UNI 7434	08A/0 08A/1 08A/2
352.11120	ANELLO SEEGER E 12 UNI 7434	004/0 004/1 004/2 004/3
		004/4 04A/0 04A/1 04A/2
		04B/0
371.11150	CUSCIN. 6202 (15X35X11)	004/0 004/1 004/2 004/3
		004/4 04A/0 04A/1 04A/2
		04B/0
371.11152	CUSCIN. 6302 (15X42X13) SKF	004/0 004/1 004/2 004/3
		004/4 04A/0 04A/1 04A/2
		04B/0
371.11200	CUSCIN. 6004 (20X42X12)	05D/0 05D/1 05D/2
371.11201	CUSCIN. 6204 (20X47X14)	05D/0 05D/1 05D/2
371.11202	CUSCIN. 6304 (20X52X15)	006/0
371.11250	CUSCIN. 6205 (25X52X15)	004/0 004/1 004/2 004/3
		004/4 005/0 005/1 005/2
		005/3 04A/0 04A/1 04A/2
		04B/0 05A/0 05C/0 05C/1
		05C/2 05C/3 06A/0
371.11253	CUSCIN. 6005 (25X47X12)	006/0 06A/0
371.11300	CUSCIN. 6206 (30X62X16)	05D/0 05D/1 05D/2
371.12171	CUSCIN. 6203-2RS (174012) SKF	02A/0
371.12173	CUSCIN. 6203-2RS C3 WT SKF	002/0 002/1 002/2 002/3
		002/4
371.12229	CUSCIN. 6006 (30X55X13) SKF	004/0 004/1 004/2 004/3
		004/4 04A/0 04A/1 04A/2

codice	denominazione	tavola
		04B/0
371.12230	CUSCIN. 6006-2RS1 (305513) SKF	05B/0 05D/0 05D/1 05D/2
371.12231	CUSCIN. 6204-2RS1 C3 SKF	002/3 002/4
371.12233	CUSCIN. 6006-2RS1 C3 SKF	002/0 002/1 002/2 002/3
		002/4
371.12250	CUSCIN. 6205-2RS (25X52X15)	05B/0
371.41250	CUSCIN. 7205-B OBL SKF	004/1 004/2 004/3 004/4
373.20120	GABBIA R/NI K 12X15/10 H	004/0 004/1 004/2 004/3
		004/4 04A/0 04A/1 04A/2
		04B/0
379.10832	SFERA 1/4 GRADO C	004/0 004/1 004/2 004/3
		004/4 04A/0 04A/1 04A/2
		04B/0
379.11532	SFERA 15/32 GRADO C	009/0 009/1 009/2 009/3
		009/4 07A/0 07A/1 07A/2
		07A/3 09A/0
381.11191	ANELLO OR 115 (11,91X2,62)	05A/0 05B/0 05C/0 05C/1
		05C/2 05C/3 07A/2 07A/3
381.11400	ANELLO OR 2056 (14,00X1,78)	006/0 06A/0
381.11800	ANELLO OR 4075 (18,64X3,53)	05C/0 05C/1 05C/2 05C/3
381.12817	ANELLO OR 4112 (28,17X3,53)	07A/0 07A/1 07A/2 07A/3
382.02003	PARAOLIO 40X52X7 RP DIN 3760	05D/0 05D/1 05D/2
382.02502	PARAOLIO 14X18X3/A-DH1	009/0
382.11400	PARAOLIO 14X22X4	009/0 009/1 009/2 009/3
		009/4 07A/0 07A/1 07A/2
		07A/3 09A/0
382.11500	PARAOLIO 15X28X6	003/0 003/1 003/2 003/3
		03B/0 04A/1 04A/2 04B/0
382.11501	PARAOLIO 15X40X10	04A/0
382.12501	PARAOLIO 25X52X10	005/0 005/1 005/2 005/3
		05A/0
382.13002	PARAOLIO 30X40X7	006/0 06A/0
382.13003	PARAOLIO 30X47X7	05D/0 05D/1 05D/2
382.13501	PARAOLIO 35X52X8	05C/0
382.13503	PARAOLIO 35X52X8 RP ROLF	05C/1 05C/2 05C/3
382.13800	PARAOLIO 38X55X7	004/0 004/1 004/2 004/3
		004/4 04A/0 04A/1 04A/2
		04B/0
391.13501	PN 21X11.00-8 NHS RWH TBL	011/2 011/3 011/4
391.13502	PN 3.50-8 2PR TRAC-SAVAK	011/0 011/1 011/2 011/3
		011/4
391.14008	PN 4.00-8 2PR TM	011/0 011/1 011/2 011/3
		011/4
391.14010	PN 4.0-10 2PR TM	011/0 011/1 011/2 011/3
		011/4
391.15010	PN 5.0(5.00)-10 2PR TM	011/0 011/1 011/2 011/3
		011/4
391.16018	PN 6.5/80-12 2PR TM	011/1 011/2 011/3 011/4
391.18020	PN 20X8.00-10 4PR HHS SOFTRAC	011/0 011/1 011/2 011/3
394.13502	C/D'ARIA 8C220 PER 3.50-8	011/0 011/1 011/2 011/3
		011/4
394.14008	C/D'ARIA 8C220 PER 4.00-8	011/0 011/1 011/2 011/3
		011/4
394.14010	C/D'ARIA 10C250 PER 4.0-10	011/0 011/1 011/2 011/3
		011/4
394.15010	C/D'ARIA 10C290 PER 5.0-10	011/0 011/1 011/2 011/3
		011/4
394.16018	C/D'ARIA 12C300 PER 6-5/80-12	011/1 011/2 011/3 011/4
509.47833	LEVA FRIZIONE CORTA	002/0 002/1 002/2 002/3
509.56262	LEVA FRIZIONE AE	002/4
513.56610	FLANGIA SCATOLA CAMBIO	05C/3
521.48105	CONO FRIZIONE LUNGA	02A/0
523.47820	SEMIASSE FRIZIONE DI STERZO	05B/0
523.47821	MOZZO FRIZIONE DI STERZO	05B/0
523.47853	FORCELLA FRIZIONE DI STERZO	05B/0
523.47857	MOZZO PORTACUSCINETTO	05B/0
523.56559	CONO ESTERNO FRIZIONE	05D/0 05D/1 05D/2
523.57250	PERNO PRESA DI FORZA	009/0 009/1 009/2 009/3
		009/4 07A/0 07A/1 07A/2

AGROSAL d.o.o.

codice	denominazione	tavola
		07A/3 09A/0
524.43852	SEMIASSE LUNGO DESTRO	006/0
524.43853	SEMIASSE CORTO SINISTRO	006/0
524.47896	SPINGICONO	002/0 002/1 002/2 002/3
		002/4
524.48182	INNESTO MAGGIORATO	006/0
524.48187	SEMIASSE CORTO D25 SINISTRO	06A/0
524.48188	SEMIASSE LUNGO D25 DESTRO	06A/0
524.56335	ALBERO PRESA DI FORZA	04A/0 04A/1 04A/2 04B/0
524.56336	ALBERO PRESA DI FORZA	004/0 004/1 004/2 004/3
		004/4
524.56339	ALBERO FRIZIONE	04A/0 04A/1 04A/2 04B/0
524.56340	ALBERO FRIZIONE	004/0 004/1 004/2 004/3
		004/4
524.56341	ALBERO FRIZIONE A DISCHI	004/4
524.56344	SUPPORTO INGRANAGGIO R/MARCIA	004/0 004/1 004/2 004/3
		04B/0
524.56349	SUPPORTO INGRANAGGIO R/MARCIA	004/4
524.56354	INGRANAGGIO I VELOCITA'	004/0 004/1 004/2 004/3
		004/4 04A/0 04A/1 04A/2
524.56355	SCORREVOLE MARCE	04B/0
524.56356	SCORREVOLE MARCE 1+1	04A/0 04A/1 04A/2
524.56359	SCORREVOLE MARCE	004/0 004/1
524.56360	SCORREVOLE MARCE 4+3	004/2 004/3 004/4
524.56362	INNESTO PRESA DI FORZA	004/0 004/1 004/2 004/3
		004/4 04A/0 04A/1 04A/2
		04B/0
524.56370	SCORREVOLE INVERTITORE	004/0 004/1 004/2 004/3
		004/4 04B/0
524.56389	LEVA SCORREVOLE MARCE	004/0 004/1 004/2 004/3
		004/4 04A/0 04A/1 04A/2
		04B/0
524.56390	LEVA SCORREVOLE PRESA DI FORZA	004/0 004/1 004/2 004/3
		004/4 04A/0 04A/1 04A/2
		04B/0
524.56556	ALBERO FRIZIONE WS	05D/0 05D/1 05D/2
524.56560	SEMIASSE RUOTA WS	05D/0 05D/1 05D/2
524.56564	INGRANAGGIO CONDOTTO Z=26	05D/0 05D/1 05D/2
524.56567	DISCO DENTATO	05D/0 05D/1 05D/2
530.48656	MARCHIO OVALE	012/0 012/1 07A/0 07A/1
		07A/2 07A/3
531.43128	COPERCHIO SUP CON FORO M10	003/1 03A/1 03A/2
531.43712	DISTANZIALE RUOTA	011/0 011/1 011/2 011/3
		011/4
531.43875	COPERCHIO SCAT.CAMBIO DIFFER.P	003/0 003/1 003/2 003/3
531.43879	COPERCHIO SCAT.CAMBIO CHIUSO	003/0 003/1 003/2 003/3
		03A/0 03A/1 03A/2
531.47482	FLANGIA MOTORE VANG.12,5CV mr	002/0 002/1 002/2
531.48107	CAMPANA FRIZIONE LUNGA	02A/0
531.56150	FLANGIA MOTORE B&S 8HP I/P	002/2 002/3 002/4
531.56325	CORPO SCATOLA	03A/0 03A/1 03A/2
531.56326	CORPO SCATOLA LUNGA	003/0 003/1 003/2 003/3
		03B/0
531.56327	CORPO SCATOLA (MF 600)	003/0 003/1 003/2 003/3
531.56332	COPERCHIO POSTERIORE	003/0 003/1 003/2 003/3
		03A/0 03A/1 03A/2 03B/0
531.56342	SUPPORTO INGRANAGGIO R/MARCIA	03A/0 03A/1 03A/2
532.43851	MOZZO PER SEMIASSE	006/0 06A/0
532.47468	FLANGIA H21 PER MOTORI 5HP	002/3
532.47488	FLANGIA MOTORE H=21	002/4
532.47818	SCATOLA FRIZIONE DI STERZO	05B/0
532.47819	FLANGIA ASSE RUOTE	05A/0
532.56551	FLANGIA SCATOLA CAMBIO (mr)	05C/0 05C/1
532.56553	FLANGIA INTERMEDIA RIDUTTORI	05D/0 05D/1 05D/2
532.56554	COPERCHIO RIDUTTORE mr	05D/0
532.56601	FLANGIA SCATOLA CAMBIO	05C/2
532.57808	COPERCHIO RIDUTTORE INTEGRALE	05D/1 05D/2
541.43090	CORONA Z=49 DESTRORSA MC	005/1 005/2 005/3
541.43149	CORONA Z=49 MF SINIS. 2PR	005/0 005/1 005/2 005/3

codice	denominazione	tavola
		05A/0
541.56482	CORONA Z=47 (DESTRORSA)	05C/0 05C/1 05C/2 05C/3
551.02678	ANELLO GOMMA	003/0 003/1 003/2 003/3
		03A/0 03A/1 03A/2 03B/0
551.02714	MANOPOLA PIATTA	007/0 007/1 007/2 007/3
		07A/0 07A/1 07A/2 07A/3
551.42076	POMOLO	009/0 009/1 009/2 009/3
		009/4 07A/0 07A/1 07A/2
		07A/3 09A/0
551.47842	SOFFIETTO (PER LEVA FRIZ.AUT.)	002/0 002/1 002/2 002/3
		002/4
551.57609	SOFFIETTO	002/4
552.20363	PULEGGIA FRENI	007/0 007/1 007/2 007/3
552.42528	SNODO D10	009/0 009/1 009/2 009/3
		009/4 09A/0
552.43338	SUPPORTO ASTA COMANDI	007/0
552.43340	SUPPORTO ASTA COMANDI TAGLIATO	007/1 007/2 007/3 07A/0
		07A/1 07A/2 07A/3 08C/0
		08C/1
552.43592	CALOTTA RUOTA	005/0 005/1 005/2 005/3
552.47636	CRUSCOTTO PIANTONE	07A/0 07A/1 07A/2 07A/3
552.47645	SNODO CAMBIO MF	07A/0 07A/1 07A/2 07A/3
552.47659	SEMIMANOPOLA DESTRA	08A/0 08A/1 08A/2 08D/0
		08D/1
552.47660	SEMIMANOPOLA SINISTRA	08A/0 08A/1 08A/2 08D/0
		08D/1
552.47661	LINGUETTA	08A/0 08A/1 08A/2 08D/0
		08D/1
552.48036	LEVA MOTORSTOP	008/0
552.48038	CONTRASTO MOT/STOP	008/0 008/1 008/2 008/3
		008/4 08A/0 08A/1 08A/2
		08B/0 08B/1 08B/2 08B/3
		08D/0 08D/1
552.48041	LEVA MOTORSTOP SENZA BCS	008/1 008/2 008/3 008/4
		08B/0 08B/1 08B/2 08B/3
		08C/0 08C/1 08D/0 08D/1
552.48072	POMOLO LEVA RIDUTTORE	07A/0 07A/1 07A/2 07A/3
552.48283	LEVA COMANDO INVERTITORE	008/0 008/1 008/2 008/3
		008/4 08A/0 08A/1 08A/2
		08B/0 08B/1 08B/2 08B/3
		08C/0 08C/1 08D/0 08D/1
552.48284	LEVA BLOCCAGGIO DIFF	008/0 008/1 008/2 008/3
		008/4 08B/0 08B/1 08B/2
		08B/3
552.48293	LEVA MOTORSTOP TAGLIATA	08A/0 08A/1 08A/2
552.48379	SNODO P.D.F.	07A/0 07A/1 07A/2 07A/3
		09A/0
552.51686	SUPPORTO LEVA	07B/0
552.51688	LEVA DI REGOLAZIONE	07B/0
552.56756	LEVA COMANDO FRENI	08D/0 08D/1
552.56757	PULEGGIA COMANDO FRENI	08D/0 08D/1
552.57255	CONTRASTO PDF 3+2	07A/0
552.57313	RULLO LEVA INVERTITORE	07A/1 07A/2 07A/3 09A/0
552.57321	CONTRASTO PDF MC	09A/0
552.57322	CONTRASTO PDF MF	07A/1 07A/2 07A/3
552.57525	PROTEZIONE SUPERIORE MF	001/0 001/1 001/2 001/3
		001/4 001/5
552.57526	PROTEZIONE CENTRALE MF	001/0 001/1
552.57559	PARAFANGO SINISTRO	001/1 001/2 001/3 001/4
		001/5
552.57560	PARAFANGO DESTRO	001/1 001/2 001/3 001/4
		001/5
552.57564	CARENATURA MF 630WS	001/1
552.57581	CARENATURA BCS	001/2 001/3 001/4 001/5
561.19937	SUPPORTO BATTERIA	01A/0 01A/1 01A/2
561.20364	BUSSOLA PULEGGIA FRENI	007/0 007/1 007/2 007/3
561.37370	FERMABATTERIA	01A/0 01A/1 01A/2 01B/0
561.42314	RONDELLA 12,5x34/4	005/0 005/1 005/2 005/3
561.43059	DISTANZIALE	005/0 005/1 005/2 005/3

AGROSAL d.o.o.

codice	denominazione	tavola
		05A/0
561.43121	PASTIGLIA CENTRAGGIO	02A/0
561.43122	BOCCOLA PORTAMOLLA	02A/0
561.43360	ASTA COMANDO	009/0
561.43865	ANELLO PER SEMIASSE	006/0
561.43878	STAFFA CONTRASTO FRIZIONE	003/1
561.43880	LEVETTA DI SGANCIO	006/0 06A/0
561.43883	CONTRASTO GUAINA DIFFERENZIALE	006/0 06A/0
561.47499	PROTEZ.COLLETTORE DI SCARICO	002/1 002/2
561.47520	COPERCHIO LATERALE SCATOLA	003/0 003/1 003/2 003/3
		03A/1 03A/2 03B/0
561.47531	BARILOTTO FERMO LEVA STERZO	08A/0 08A/1 08A/2
561.47534	FERMO LEVA STERZO	08A/0 08A/1 08A/2
561.47540	DISTANZIALE LEVA STERZO	08A/0 08A/1 08A/2
561.47541	BARILOTTO LEVA STERZO	08A/0 08A/1 08A/2
561.47542	LEVA FRIZIONE DI STERZO	08A/0 08A/1 08A/2
561.47560	CONTRASTO LEVA R/MARCIA	07A/0 07A/1 07A/2 07A/3
561.47574	BLOCCHETTO INVERTIT	07A/0 07A/1 07A/2 07A/3
561.47641	CAVALLOTTO MANUBRIO	07A/0 07A/1 07A/2 07A/3
561.47646	ASTA COMANDO MARCE	07A/0 07A/1 07A/2 07A/3
561.47648	ASTA COMANDO PRESA DI FORZA	07A/0 07A/1 07A/2 07A/3
561.47655	LEVA FRIZIONE A DISCHI	008/0 008/1 008/2 008/3
		008/4 08B/0 08B/1 08B/2
		08B/3 08C/0 08C/1 08D/0
		08D/1
561.47657	LEVA FRIZIONE A CONO AUTOVENT.	08A/0 08A/1 08A/2
561.47664	INGRANAGGIO INVERSIONE Z-12	07A/0 07A/1 07A/2 07A/3
561.47672	PERNO DI GUIDA	07A/0 07A/1 07A/2 07A/3
561.47703	INGRANAGGIO INVERSORE PIEG.	07A/0 07A/1 07A/2 07A/3
561.47711	PERNO RITEGNO MOLLA M/S	008/0 008/1 008/2 008/3
		008/4 08B/0 08B/1 08B/2
		08B/3 08C/0 08C/1
561.47845	LEVA FRIZIONE AUTOVENTILANTE	002/0 002/1 002/2 002/3
		002/4
561.47863	CONTRASTO CAVO FRENO	05B/0
561.47923	STAFFA DI CONTRASTO LUNGA	003/1 003/2 003/3 03A/1
		03A/2
561.48037	FERMO LEVA MOT/STOP	008/0 008/1 008/2 008/3
		008/4 08B/0 08B/1 08B/2
		08B/3 08C/0 08C/1 08D/0
		08D/1
561.48184	ANELLO SEMIASSE	05B/0 06A/0
561.48218	TAMBURO FRENO .D 136.	010/0 010/1 010/2
561.48285	PERNO	008/0 008/1 008/2 008/3
		008/4 08A/0 08A/1 08A/2
		08B/0 08B/1 08B/2 08B/3
		08C/0 08C/1 08D/0 08D/1
561.48286	PERNO FORATO	008/0 008/1 08A/0 08B/0
561.48287	PERNO FILETTATO	008/0 008/1 008/2 008/3
		008/4 08B/0 08B/1 08B/2
		08B/3 08D/0 08D/1
561.48470	LEVA	010/0 010/1 010/2 08D/0
561.49590	FERMABATTERIA L=200	01A/0 01A/1 01A/2 01B/0
561.49655	ASTA DI COMANDO	009/0 009/1 009/2 009/3
		009/4
561.49820	DISCO INTERNO FRIZIONE	05B/0
561.50361	DISTANZIALE LEVE	008/0 008/1 008/2 008/3
		008/4 010/0 010/1 010/2
		08A/0 08A/1 08A/2 08B/0
		08B/1 08B/2 08B/3 08C/0
		08C/1 08D/0 08D/1
561.56119	RIPARO MOTORE ACT 280-340	001/5 01A/3
561.56152	PROTEZ.MARMITTA VANGUARD 14HP	002/2
561.56487	DISTANZIALE RUOTE 3.50-8"	005/3
561.56488	PROTEZIONE RUOTE 3.50-8"	005/3
561.56566	CONTRASTO MOLLA	05D/0 05D/1 05D/2
561.56568	DISTANZIALE	05C/0 05C/1 05C/2 05C/3
561.56571	SUPPORTO LEVA COMANDO SINISTRO	05D/0 05D/1 05D/2
561.56572	SUPPORTO LEVA COMANDO DESTRO	05D/0 05D/1 05D/2

codice	denominazione	tavola
561.56577	DISTANZIALE	05D/0 05D/1 05D/2
561.56585	CONTRASTO MOLLA INTERNO	05D/1 05D/2
561.56591	BARILOTTO D=8 TAGLIATO WS	08D/0 08D/1
561.56603	DISTANZIALE LEVE	08D/1
561.56604	LEVA FRIZIONE E FRENI TAGLIATA	08D/1
561.56940	CAVALLOTTO MANUBRIO 27.003	007/0 007/1 007/2 007/3
561.56948	CONTRASTO MOLLA PIANTONE	007/3
561.56968	FERMO LEVA SBLOCC.MANUBRIO	07A/2 07A/3
561.56990	CARROZZERIA MF LAT./97	001/3 001/4 001/5
561.57097	PROLUNGA MANUBRIO WS	08A/0 08A/1 08A/2
561.57234	SELETTORE MARCE 1+1	09A/0
561.57235	SELETTORE MARCE MF	009/0 009/1 009/2 009/3
		009/4
561.57239	SELETTORE MARCE	07A/0 07A/1 07A/2 07A/3
561.57244	CONTRASTO LEVA INVERTITORE	009/0 009/1 009/2 009/3
		009/4
561.57246	CONTRASTO GUAINA	009/0 009/1 009/2 009/3
		009/4
561.57256	LEVA PRESA DI FORZA MF	009/0 009/1 009/2 009/3
		009/4
561.57267	LEVA PRESA DI FORZA LUNGA	07A/0
561.57271	LEVA COMANDO CAMBIO CORTA	07A/0 07A/1 07A/2 07A/3
		09A/0
561.57274	SQUADRETTA	09A/0
561.57282	ASTA PDF MC 710/720 CON AE	09A/0
561.57283	ASTA CAMBIO 710AE	09A/0
561.57303	DISTANZIALE PER LEVA	07A/0 07A/1 07A/2 07A/3
561.57307	SELETTORE MF 610	009/1 009/2 009/3 009/4
561.57323	LEVA PRESA DI FORZA CORTA	09A/0
561.57324	LEVA PRESA DI FORZA LUNGA	07A/1 07A/2 07A/3
561.57332	CAVALLOTTO	008/2 008/3 008/4 08A/1
		08A/2 08B/1 08B/2 08B/3
		08C/0 08C/1 08D/0 08D/1
561.57341	SELETTORE MARCE 2+2	09A/0
561.57353	SELETTORE MARCE MF WS2	009/4
561.57603	SOSTEGNO SCATOLA BATTERIA	01B/0
561.57606	CONTRASTO FRIZIONE	003/2 003/3
561.57607	DISTANZIALE CONTRASTO FRIZIONE	003/2 003/3
561.57807	FONDELLO DI PROTEZIONE	05D/1 05D/2
561.57821	SQUADRA RINFORZO WS2 (mr)	05C/1
561.57822	SQUADRA RINFORZO WS2	05C/2
561.57834	PIASTRA RINFORZO INFERIORE	05C/3
562.43113	LEVA FRIZIONE	02A/0
563.43058	ALBERO RUOTE	005/0 005/1 005/2 005/3
563.43106	PIASTRINA CUSCINETTO	02A/0
563.47484	RONDELLA SPALLAMENTO FRIZIONE	002/0 002/1 002/2 002/3
		002/4
563.47700	PUNTALE D-8	07A/0 07A/1
563.47854	PROTEZIONE CUSCINETTO	05B/0 05D/0 05D/1 05D/2
563.49782	CHIAVETTA MOTORE KOHLER	002/0 002/1 002/2 002/3
		002/4
563.51685	ASTA POSIZIONE MANUBRIO	07B/0
563.56165	CHIAVETTA MOTORE HONDA	002/4
563.56251	RONDELLA SPALL.FRIZ. D=19,6	002/3 002/4
563.56328	ANELLO DI RASAMENTO SP=1,5	004/0 004/1 004/2 004/3
		004/4 04A/0 04A/1 04A/2
		04B/0
563.56329	ANELLO DI RASAMENTO SP=1,6	004/0 004/1 004/2 004/3
		004/4 04A/0 04A/1 04A/2
		04B/0
563.56330	ANELLO DI RASAMENTO SP=1,7	004/0 004/1 004/2 004/3
		004/4 04A/0 04A/1 04A/2
		04B/0
563.56331	ANELLO DI RASAMENTO SP=1,8	004/0 004/1 004/2 004/3
		004/4 04A/0 04A/1 04A/2
		04B/0
563.56348	ANELLO DI RASAMENTO	004/4 04A/0 04A/1 04A/2
563.56924	PUNTALE	07A/2 07A/3
563.59553	PERNO TRASCINAMENTO FILETTATO	011/4

AGROSAL d.o.o.

codice	denominazione	tavola
563.59554	PERNO ACCOPPIAMENTO FILETTATO	011/4
564.43857	DISTANZIALE DENT MC730-MF630	006/0
564.43871	ASTA	006/0 06A/0
564.48183	DISTANZ.DENT.MC 740/745 MF 650	06A/0
564.48196	INNESTO FRONTALE	06A/0
564.56347	INGRANAGGIO INVERTITORE	004/0 004/1 004/2 004/3
		004/4 04A/0 04A/1 04A/2
		04B/0
564.56350	PERNO INGRANAGGIO Z=15	04A/0 04A/1 04A/2
564.56351	PERNO INGRANAGGIO	004/0 004/1 004/2 004/3
		004/4 04B/0
564.56475	VITE S.F. 2 PRINC	04A/0 04A/1 04A/2 04B/0
564.56477	VITE S.F. 4 PRINC DS	004/3 004/4
564.56478	VITE S.F. 2 PRINC	004/0 004/1 004/2 004/3
		004/4
564.56569	ALBERO CENTRALE WS	05C/0 05C/1 05C/2 05C/3
571.48509	FONDELLO DI PROT D32	07A/0 07A/1 07A/2 07A/3
580.02429	SERRAFILO	006/0 008/0 008/1 008/2
		008/3 008/4 07A/0 07A/1
		07A/2 07A/3 08A/0 08A/1
		08A/2 08B/0 08B/1 08B/2
		08B/3 08C/0 08C/1 08D/0
		08D/1
580.02538	LEVA COMANDO GAS	008/0 008/1 008/2 008/3
		008/4 08A/0 08A/1 08A/2
		08B/0 08B/1 08B/2 08B/3
		08C/0 08C/1 08D/0 08D/1
580.20258	MOLLA SCATTO MARCE	09A/0
580.25866	SPESSORE DI RASAMENTO 0,2 IT	05C/0 05C/1 05C/2 05C/3
580.25867	SPESSORE DI RASAMENTO 0,3 IT	05C/0 05C/1 05C/2 05C/3
580.25868	SPESSORE DI RASAMENTO 0,5 IT	05C/0 05C/1 05C/2 05C/3
580.25869	SPESSORE DI RASAMENTO 1,0 IT	05C/0 05C/1 05C/2 05C/3
580.26222	FILO E GUAINA GAS AD114	008/0 008/1 008/2 008/3
		008/4 08A/0 08A/1 08A/2
		08D/0 08D/1
580.26321	MOLLA RITORNO LEVA	07A/0 07A/1 07A/2 07A/3
580.27230	ANELLO PARAPOLVERE	07A/2 07A/3
580.42067	FILO E GUAINA GAS L = 1530	008/3 008/4 08A/2 08B/3
		08D/0 08D/1
580.42167	CAPOGUAINA	006/0 008/0 008/1 008/2
		008/3 008/4 05B/0 07A/0
		07A/1 07A/2 07A/3 08B/0
		08B/1 08B/2 08B/3 08C/0
		08C/1
580.42200	SERRAFILO M6	008/0 010/0 010/1 010/2
		05B/0 08C/0 08C/1
580.42202	VITE REGISTRO M8	008/0 008/1 008/2 008/3
		008/4 010/0 010/1 010/2
		08A/0 08A/1 08A/2 08B/0
		08B/1 08B/2 08B/3 08C/0
		08C/1 08D/0 08D/1
580.42219	MOLLA	07B/0
580.43031	GOMMA ANTIURTO-USA-	01A/0 01A/1 01A/2
580.43032	SERIE CUSCINETTI ANTIURTO BAT.	01A/0 01A/1 01A/2
580.43034	CABLAGGIO AVVIAMENTO MC-MF	01A/0 01A/1 01A/2
580.43036	RADDRIZZATORE CBPC 2504	01A/0 01A/1 01A/2
580.43053	SPINA CILIND 6X20	003/0 003/1 003/2 003/3
		03A/0 03A/1 03A/2 03B/0
		05D/1 05D/2
580.43086	PATTINO	004/0 004/1 004/2 004/3
		004/4 04A/0 04A/1 04A/2
		04B/0
580.43110	MOLLA FRIZIONE	02A/0
580.43117	GUARNIZIONE COPERCHIO	003/0 003/1 003/2 003/3
		03A/0 03A/1 03A/2
580.43129	SOFFIETTO	02A/0
580.43176	MOLLA	009/0 009/1 009/2 009/3
		009/4 07A/0 07A/1 07A/2
		07A/3

codice	denominazione	tavola
580.43216	FILO E GUAINA L=1160	08B/0 08B/1 08B/2 08B/3
580.43219	FILO E GUAINA GAS L = 1680	08B/0 08B/1 08B/2 08B/3
580.43223	FILO E GUAINA L=930 FRIZ.	008/2 008/3 008/4
580.43250	CERCHIO RUOTA 2.50-8	011/0 011/1 011/2 011/3
		011/4
580.43344	CABLAGGIO MOTORE ALN330 L=410	08A/0 08A/1 08A/2 08D/0
		08D/1
580.43370	CERCHIO 2.50-8 COMPL.MF LATER.	011/0 011/1 011/2 011/3
		011/4
580.43391	LEVA CON FERMO D-27	008/0 008/1
580.43855	GUARNIZIONE	006/0 06A/0
580.43874	MOLLA	006/0 06A/0
580.43881	MOLLA	006/0 06A/0
580.44804	CERCHIO 5JA12 CARR.VARIAB.	011/1 011/2 011/3 011/4
580.45804	SPIA LUMINOSA COBO 09209000	01B/0
580.46901	ADESIVA AVVIAMENTO (mr)	012/0 013/0
580.46902	ADESIVA MOTOR STOP	012/0 013/0
580.46903	ADESIVA FRIZIONE	012/0 013/0
580.46909	ADESIVA PERICOLO PER RIF. (mr)	012/0 013/0
580.46910	ADESIVA ATTENZ.PER TEMPER.(mr)	012/0 013/0
580.46912	ADESIVA COMANDO GAS	012/0 013/0 013/1
580.46913	ADESIVA COMBIN FRENI-GAS-DIFF	012/0 013/0 013/1
580.46952	ADESIVA AVVIAM.M/S ELETTR.(mr)	012/0 013/0
580.46953	ADESIVA MOTOR STOP M/S EL.(mr)	012/0 013/0
580.47543	MOLLA LEVE FRIZIONI	08A/0 08A/1 08A/2
580.47567	MOLLA PER FERMO LEVA DX	08A/0 08A/1 08A/2
580.47568	CABLAGGIO MOT/STOP UNIF. (mr)	08B/0 08B/1 08B/2 08C/0
580.47569	MOLLA PER FERMO LEVA SX	08A/0 08A/1 08A/2
580.47624	MOLLA SBLOCCAGGIO MANUBRIO	07A/0 07A/1 07A/2 07A/3
580.47629	FILO E GUAINA L=1080-CON ANIMA	08A/1 08A/2 08C/0 08C/1
580.47647	FILO E GUAINA L=1280 CON ANIMA	08B/0 08B/1 08B/2 08B/3
580.47649	GANCIO	010/0 010/1 010/2 08D/1
580.47662	MICROINTERRUTTORE NR 84 K7	08A/0 08A/1 08A/2 08D/0
		08D/1
580.47665	CABLAGGIO MOT/STOP MANUBRIO	08A/0 08A/1 08A/2
580.47671	MOLLA INVERSORE	07A/0 07A/1 07A/2 07A/3
580.47701	MOLLA PUNTALE	07A/0 07A/1 07A/2 07A/3
580.47702	CAVO PIANTONE MC 737	07A/0 07A/1 07A/2 07A/3
580.47712	MOLLA M/STOP COMANDO DIRETTO	008/0 008/1 008/2 008/3
		008/4 08B/0 08B/1 08B/2
		08B/3 08C/0 08C/1 08D/0
580.47721	CABLAGGIO MOTORE B&S 12,5 HP	08A/0 08A/1 08A/2
580.47731	AUTOADESIVA PIANTONE MF	012/0 013/0 013/1 07A/0
		07A/1 07A/2 07A/3
580.47875	MOLLA INTERNA FRIZIONE	05D/1 05D/2
580.47885	MOLLA FRIZIONE	05D/0 05D/1 05D/2
580.48000	MANOPOLA D=27 GLISSA	008/0 008/1 008/2 008/3
		008/4 08A/0 08A/1 08A/2
		08B/0 08B/1 08B/2 08B/3
		08C/0 08C/1 08D/0 08D/1
580.48002	SERRAFILO M4	008/0 008/1 008/2 008/3
		008/4 08B/0 08B/1 08B/2
		08B/3
580.48005	FILO E GUAINA MOT/STOP L-1170	008/1 008/2 008/3 008/4
		08A/0 08A/1 08A/2 08D/0
		08D/1
580.48009	INTERRUTTORE STOP	008/0 008/1 008/2 008/3
		008/4 08B/0 08B/1 08B/2
		08B/3 08C/0 08C/1 08D/0
		08D/1
580.48012	FILO E GUAINA-1850-GAS	08B/0 08B/1 08B/2 08C/0
		08C/1
580.48025	FILO E GUAINA MOT/STOP L-1430	008/0
580.48124	CABLAGGIO MOTORE 6LD360	01A/0 01A/1 01A/2
580.48214	CEPPO	010/0 010/1 010/2
580.48215	MOLLA	010/0 010/1 010/2
580.48295	MOLLA DI RICHIAMO SPECIALE	08A/0 08A/1 08A/2
580.48301	FILO E GUAINA L-1040 D-2,5	010/2
580.48330	CERCHIO 3.50D10 CR	011/0 011/1 011/2 011/3

AGROSAL d.o.o.

codice	denominazione	tavola
		011/4
580.48331	CERCHIO 6.00I10	011/0 011/1 011/2 011/3
580.49501	FILO E GUAINA MOT/STOP L-1790	08B/0 08B/1 08B/2 08B/3
580.49663	FILO E GUAINA L=1350	010/1 010/2
580.49670	FILO E GUAINA L=1080	08A/0 08A/1 08A/2 08D/0
		08D/1
580.49815	MOLLA FRIZIONE A DISCHI	05B/0
580.49822	DISCO GUARNITO SP=3	05B/0
580.49830	MOLLA PUNTALE	07A/2 07A/3
580.50345	MOLLA PER LEVA	008/0 008/1 008/2 008/3
		010/0 010/1 010/2 08A/0
		08A/1 08A/2 08B/0 08B/1
		08B/2 08C/0
580.51670	GANCIO LEVA	008/0 008/1 008/2 008/3
		008/4 08A/0 08A/1 08A/2
		08B/0 08B/1 08B/2 08B/3
		08C/0 08C/1 08D/0 08D/1
580.52303	FILO E GUAINA MOTOR STOP	008/0
580.52304	CABLAGGIO MOT/STOP MF (mr)	008/0 008/1 008/2 008/3
580.56154	MOLLA RICHIAMO GAS HONDA G160	008/4
580.56155	MOLLA RICHIAMO GAS HONDA G240	08B/3 08C/1
580.56391	MOLLA SCORREVOLE PDF	004/0 004/1 004/2 004/3
		004/4 04A/0 04A/1 04A/2
		04B/0
580.56562	SPESSORE 0,2	05C/0 05C/1 05C/2 05C/3
580.56563	SPESSORE 0,3	05C/0 05C/1 05C/2 05C/3
580.56580	TRASMISSIONE FRIZIONE WS C.TA	08D/0 08D/1
580.56581	FILO E GUAINE FRENO WS	08D/0 08D/1
580.56582	SPESSORE 1	05C/1 05C/2 05C/3
580.56590	CABLAGGIO MOT/STOP C/DIR. (mr)	08D/0
580.56593	MOLLA LEVA FRIZIONE	008/4 08B/3 08C/1 08D/0
		08D/1
580.56594	ADESIVA 630 WS2	012/1
580.56595	VITE REGISTRO M8 LUNGA	08D/0 08D/1
580.56596	CABLAGGIO MOT/STOP C/DIRETTO	08D/1
580.56605	MOLLA LEVA FRIZIONE	08D/1
580.56606	MOLLA MOTOR-STOP WS2	08D/1
580.56942	MOLLA SBLOCCAGGIO MANUBRIO	007/0 007/1 007/2 007/3
580.56991	PASSACAVO 90/200/30 SH75-85	001/4 001/5
580.57232	MOLLA PER LEVA CAMBIO	07A/0 07A/1 07A/2 07A/3
		09A/0
580.57247	MOLLA PUNTALINO	009/0 009/1 009/2 009/3
		009/4
580.57263	SERRAFILO M 5 X MOTORI ACME	008/0 008/1 008/2 008/3
		008/4 08A/0 08A/1 08A/2
		08B/0 08B/1 08B/2 08B/3
		08D/0 08D/1
580.57266	SOSTEGNO GUAINA	07B/0
580.57273	MOLLA INVERTITORE MC720/730	09A/0
580.57286	FILO E GUAINA L=1010 X INVERT.	08C/0 08C/1
580.57287	FILO E GUAINA L=1080 X DIFFER.	008/0
580.57288	FILO E GUAINA L=1380 PER GAS	008/0
580.57289	FILO E GUAINA L=1100 X FRENI	008/2 008/3 008/4 010/0
		010/1
580.57290	FILO E GUAINA L=825 X DIFFER.	008/1
580.57291	FILO E GUAINA BARRA	008/0 008/1
580.57292	FILO E GUAINA L=1450 PER GAS	008/0
580.57293	FILO E GUAINA L=1100 PER GAS	008/0 008/1 008/2 008/3
		008/4 08A/0 08A/1 08A/2
580.57294	FILO E GUAINA L=1150 PER GAS	008/0
580.57295	FILO E GUAINA L=1060 PER GAS	008/0 008/1 008/2 008/3
		008/4 08A/0 08A/1 08A/2
		08D/0 08D/1
580.57296	FILO E GUAINA L=860 X ANIMA	008/0 008/1 08D/0 08D/1
580.57297	FILO E GUAINA INVERTIT. L=1000	008/0 008/1
580.57302	FILO E GUAINA L=800 CON ANIMA	008/1 008/2 008/3 008/4
		08A/0 08A/1 08A/2
580.57306	FILO E GUAINA (L=1300) GAS	008/1 008/2 008/3 008/4
		08A/0 08A/1 08A/2 08D/0

codice	denominazione	tavola
		08D/1
580.57333	FILO E GUAINA (L=800) DIFFER.	008/2 008/3 008/4
580.57334	LEVA PER SGANCIO BARRA LAT	008/2 008/3 008/4
580.57336	FILO E GUAINA (L=2015) GAS	08B/2 08B/3
580.57343	FILO E GUAINA(L=1350)CON ANIMA	08B/3
580.57350	FILO E GUAINA (L=2150) GAS	08B/3
580.57384	CAVO MASSA ACT340	01B/0
580.57385	FILO M/S GX	01A/3
580.57386	CABLAGGIO MOTORE L100AE YANMAR	01B/0
580.57401	CABLAGGIO MOT/STOP UNIFICATO	08B/3 08C/1
580.57402	CABLAGGIO MOT/STOP MF	008/4
580.57610	SCATOLA COPRI BATTERIA	01B/0
580.57611	SERIE GOMMA ANTIURTO BATTERIA	01B/0
580.57676	ADESIVA MARCE 1+1	013/0 013/1
580.57678	ADESIVA PRESA DI FORZA	012/0 013/0 013/1
580.57680	ADESIVA PIANTONE 710	012/1
580.57684	ADESIVA MF 610	012/0 012/1
580.57685	ADESIVA 620	012/0 012/1
580.57686	ADESIVA 630	012/0 012/1
580.57687	ADESIVA CARROZZERIA MF	012/0 012/1
580.57698	ADESIVA MARCE 4+3	009/2 009/3 009/4 012/0
		013/0 013/1
580.57703	ADESIVA 600	012/0 012/1
580.57705	ADESIVA MF 630 WS	012/0 012/1
580.57706	ADESIVA MARCE MF USA	012/0 013/0 013/1 07A/0
		07A/1 07A/2 07A/3
580.57707	ADESIVA MF 650	012/0 012/1
580.57709	ADESIVA MF 640	012/0 012/1
580.57712	ADESIVA MARCE 1+1 (610)	012/0 013/0 013/1
580.57714	ADESIVA MARCE 4+3 (PER 57270)	009/2 009/3 009/4 012/0
		013/0 013/1
580.57722	ADESIVA PERICOLO MF500/600	012/0 013/0 013/1
580.57724	ADESIVA MANUALE ISTRUZIONI	012/0 013/0 013/1
580.57729	ADESIVA 615	012/1
580.57730	ADESIVA 615 L	012/1
580.57731	ADESIVA 615 S	012/1
580.57732	ADESIVA MARCE 2+2	013/0 013/1
580.57767	ADESIVA PERICOLO PER RIFORNIM.	013/1
580.57768	ADESIVA ATTENZIONE PER TEMPER.	013/1
580.57770	ADESIVA FRIZIONE	013/1
580.57771	ADESIVA MOTOR STOP+AVV.COM.EL.	013/1
580.57772	ADESIVA MOTOR STOP + AVV.	013/1
580.57776	CERCHIO RUOTA 8.50-8 PER WS	011/2 011/3
580.57785	RUOTA MARGHERITA X 4.00-8	011/2 011/3
580.57786	RUOTA MARGHERITA X 4.00-10	011/2 011/3
580.57787	RUOTA MARGHERITA X 5.00-10	011/2 011/3
580.57790	ATTACCO PER RUOTA MARGHERITA	011/3
580.57795	CERCHIO RUOTA 8.50-8	011/4
580.59211	ADESIVA BCS	012/0 012/1
581.00052	RELE' BOSCH 0332002160	01A/0 01A/1 01A/2
581.47704	VITE REGISTRO M6	07A/0 07A/1 07A/2 07A/3
		08B/3 08C/1
581.50313	BARILOTTO (021437)	008/0 008/1 008/2 008/3
		008/4 010/0 010/1 010/2
		08A/0 08A/1 08A/2 08B/0
		08B/1 08B/2 08B/3 08C/0
		08C/1 08D/0 08D/1
581.56156	MORSETTO GAS HONDA (GX1000000)	08B/3 08C/1
581.57346	BARILOTTO D=8 PER MF LAT	008/4
590.15425	TAPPO C/ASTA LIVELLO	003/0 003/1 003/2 003/3
		03A/0 03A/1 03A/2 03B/0
590.43046	RIPARO MOT.6LD MF 602/603/605	001/0 01A/0 01A/1 01A/2
590.43063	MOZZO RUOTA C/PRIGIONIERI	005/0 005/1 005/2 005/3
590.43773	RIPARO PULEG.MOT.X MOTOFAL	001/0 01A/0 01A/1 01A/2
590.47450	RIPARO MOTORE AUTOAVV.	001/0 001/1 001/2 001/3
		001/4 001/5 01A/0 01A/1
		01A/2 01A/3
590.47454	RIPARO MOTORE B&S TWIN COMPL.	001/0 001/1 001/2 001/3
		001/4 01A/0 01A/1 01A/2

AGROSAL d.o.o.

codice	denominazione	tavola
590.47463	RIPARO MOTORE MITSUB.GM280/300	001/3 001/4 001/5 01A/1
		01A/2 01A/3
590.47608	MANUBRIO LARGO UNIFICATO CTO	08B/0
590.47610	PIANTONE COMPLETO	07A/0 07A/1 07A/2 07A/3
590.47620	LEVA SBLOCCAGGIO STEGOLA CTA	07A/0 07A/1 07A/2 07A/3
590.47625	LEVA BLOCCAGGIO PIANTONE CTA	07A/0 07A/1 07A/2 07A/3
590.47666	LEVA COMANDO POSIZ.INVERT.CTA	07A/0 07A/1 07A/2 07A/3
590.47688	ATTACCO PIANT.C/SIL.CH15 (mr)	07A/0 07A/1
590.47708	SUPPORTO BATTERIA AT330 CTO	01A/0 01A/1 01A/2
590.47709	SUPPORTO INTERR.STOP COMPLETO	008/0 008/1 008/2 008/3
		008/4 08B/0 08B/1 08B/2
		08B/3 08C/0 08C/1
590.47743	COPRIMOZZO LUNGO	011/1 011/2 011/3 011/4
590.47745	COPRIMOZZO COMPLETO CORTO	011/1 011/2 011/3 011/4
590.47858	CAMPANA FRIZIONE STERZO CTA	05A/0
590.47865	LEVA FRIZIONE DI STERZO	05B/0
590.47871	ALBERO CENTR FRIZ DI STERZO C	05A/0
590.47927	RIPARO MOTORE A 220	001/0 001/1 001/2 001/3
		001/4 001/5
590.48042	SUPPORTO BATTERIA 725-735-604	01A/0 01A/1 01A/2
590.48102	ANELLO-FRIZ.LUNGA-COMPLETO	02A/0
590.48122	SUPPORTO BATTERIA 6LD360 CTO	01A/0 01A/1 01A/2
590.48181	DIFFERENZIALE 605 COMPLETO	06A/0
590.48200	SEMIDISCO LEVA COMPLETO	010/0 010/1 010/2
590.48208	SEMIDISCO PERNO COMPLETO	010/0 010/1 010/2
590.48469	ATTACCO LEVA DOPPIA D.27 C.	010/0 010/1 010/2
590.48522	SUPPORTO CON SILENTBLOC CTO	009/0 009/1
590.49810	FONDELLO FRIZIONE COMPLETO	05B/0
590.51682	PIANTONE MANUBRIO COMPLETO	07B/0
590.56051	RIPARO MOTORE 15LD315	001/0 001/1 001/2 001/3
		001/4 001/5 01A/3
590.56052	RIPARO MOTORE 6LD AA	01A/0 01A/1 01A/2
590.56089	RIPARO MOTORE HONDA	001/5 01A/2 01A/3
590.56111	RIPARO C.TO L100AE	01A/3
590.56258	FORCELLA FRIZIONE COMPLETA	01B/0
590.56365	INGR PRESA DI FORZA COMPLETO	004/0 004/1 004/2 004/3
		004/4 04B/0
590.56373	INGRANAGGIO DOPPIO COMPLETO	04B/0
590.56378	ALBERO CAMBIO COMPLETO	04A/0 04A/1 04A/2
590.56383	INGRANAGGIO TRIPLO COMPL.	004/2 004/3 004/4
590.56385	INGRANAGGIO TRIPLO COMPLETO	004/0 004/1
590.56555	CAMPANA FRIZIONE STERZO CTA	05D/0 05D/1 05D/2
590.56558	CONO INTERNO FRIZ STERZO CTO	05C/0 05C/1 05C/2 05C/3
590.56573	LEVA WS SINISTRA COMPLETA	05D/0 05D/1 05D/2
590.56574	LEVA WS DESTRA COMPLETA	05D/0 05D/1 05D/2
590.56583	PERNO COMPLETO SINISTRO	05D/0 05D/1 05D/2
590.56584	PERNO COMPLETO DESTRO	05D/0 05D/1 05D/2
590.56900	SUPPORTO MANUBRIO COMPLETO	09A/0
590.56905	COPPA COMPLETA	09A/0
590.56925	PIANTONE MF COMPLETO	007/0 007/1
590.56935	LEVA SELETTORE MANUBRIO COMPL.	007/0 007/1 007/2 007/3
590.56945	SUPPORTO MF600+SILENTBLOC CTO	009/0 009/1
590.56960	SUPPORTO PIANTONE COMPL. (mr)	07A/2
590.56969	ATTACCO PIANTONE C/SILENTBLOC	07A/2 07A/3
590.56970	SUPP.PIANTONE COMPLETO (mr)	07A/0 07A/1
590.56972	SUPPORTO PIANTONE COMPLETO	07A/3
590.56975	SUPPORTO PIANT.MF/97 COMPLETO	009/2 009/3 009/4
590.56980	PIANTONE MF/97 COMP+SILENTBLOC	007/2 007/3
590.56982	SOSTEGNO CARR.MF BASSO COMPL.	001/3 001/4 001/5
590.56984	SOSTEGNO CARR.MF/97 ALTO COMPL	001/3 001/4
590.56986	SOSTEGNO CARR.MF610/97 COMPL	001/3 001/4 001/5
590.56989	SUPPORTO PIANT.MF LAT/97 COMPL	009/2 009/3 009/4
590.57075	MANUBRIO MF COMPLETO	008/1
590.57076	MANUBRIO COMPL.MF 610	008/1 008/2 008/3 008/4
590.57077	MANUBRIO MF COMPLETO	008/2 008/3 008/4
590.57078	MANUBRIO MF/WS COMPLETO	08A/1 08A/2
590.57081	MANUBRIO MF WS2 COMPLETO	08D/0
590.57082	MANUBRIO MF WS2 DIESEL CTO	08D/0
590.57090	MANUBRIO MF COMPLETO	008/0

codice	denominazione	tavola
590.57093	MANUBRIO COMPLETO MF 630 WS	08A/0
590.57100	MANUBRIO MF WS2 C.TO	08D/1
590.57101	MANUBRIO MF WS2 DIESEL C.TO	08D/1
590.57110	MANUBRIO COMPL.SILENTBLOC USA	08C/0 08C/1
590.57112	MANUBRIO COMPL.SILENTBLOC	08C/0 08C/1
590.57115	MANUBRIO LARGO UNIFICATO CTO	08B/1 08B/2 08B/3
590.57228	LEVA CAMBIO MC 710 COMPLETA	09A/0
590.57240	LEVA INVERTITORE COMPLETA	009/0 009/1 009/2 009/3
		009/4
590.57252	LEVA CAMBIO MF COMPLETA	009/0 009/1 009/2 009/3
		009/4
590.57270	ASTA CAMBIO MF	009/1 009/2 009/3 009/4
590.57280	LEVA INVERTITORE COMPLETA MF	07A/0
590.57300	LEVA CAMBIO MC 740 COMPLETA	07A/0 07A/1 07A/2 07A/3
590.57304	LEVA CAMBIO MC USA-MF615 CTA	09A/0
590.57308	LEVA CAMBIO MF 610 COMPLETA	009/1 009/2 009/3 009/4
590.57309	ASTA CAMBIO MF 610	009/1 009/2 009/3 009/4
590.57315	LEVA INVERTITORE COMPLETA MF	07A/1 07A/2 07A/3
590.57319	LEVA INVERTITORE MC720/730 COM	09A/0
590.57325	LEVA CONTRASTO PDF COMPL	09A/0
590.57527	SOSTEGNO SUPERIORE COMPLETO	001/0 001/1
590.57530	SUSTEGNO SUPERIORE COMPL.	001/0 001/1
590.57533	SOSTEGNO INFERIORE COMPL.	001/0 001/1
590.57535	SOSTEGNO INFERIORE COMPL.	001/0 001/1
590.57561	RIPARO PIANTONE MF600 COMPLETO	001/0 001/1 001/2
590.57566	SOSTEGNO SUPERIORE COMPL.MF610	001/1
590.57568	SOSTEGNO INFERIORE COMPL.MF610	001/1
590.57575	SOSTEGNO SUPERIORE COMPLETO	001/2
590.57576	SOSTEGNO INF.COMPL	001/2
590.57579	SOSTEGNO INF COMPL	001/2
590.57580	SOSTEGNO SUPERIORE COMPLETO	001/2
590.57587	SOSTEGNO INF COMPL 610	001/2
590.57588	SOSTEGNO SUPERIORE CTO 610	001/2
590.57592	CARENATURA MF 630WS COMPLETA	001/2 001/3 001/4 001/5
590.57604	SCATOLA BATT.6LD435-YANMAR COM	01B/0
590.57608	SCATOLA BATTERIA ACT340 COMPL.	01B/0
590.57800	FONDELLO DI PROTEZIONE CTO	05D/0
590.57804	PROTEZIONE WS2 C.TA (mr)	05D/0
590.57819	PIASTRA RINF.WS2 COMPLETA (mr)	05C/1
590.57824	PIASTRA RINFORZO WS2 C.TA	05C/2
590.57831	PIASTRA RINF.SUPER.WS2 COMPLET	03B/0
590.59551	FLANGIA ACCOPPIAM.RUOTE C.TA	011/4
590.59561	VITE FISSAGGIO RUOTA ANTIDERIV	011/4
590.59571	FLANGIA ACCOPPIAMENTO RUOT.CTA	011/4
592.47822	FRIZIONE CTA ASSE RUOTA WS	05B/0
592.47884	FRIZIONE CONICA CTA	002/0 002/1 002/2 002/3
		002/4
592.47970	FRIZ.AUT.COM.B&S 11HP-VAN.12HP	002/0 002/1 002/2
592.47971	FRIZ.CONICA AUT.COMP-2MOL.10CV	002/0 002/1 002/2 002/3
		002/4
592.48106	FRIZIONE LUNGA MONTATA	02A/0
592.48490	DIFFERENZIALE MF COMPLETO	006/0
592.56252	FRIZIONE CTA D19 B&S HP5 MC710	002/3
592.56253	FRIZIONE COMPLETA D25,4 1MOLLA	002/2 002/3 002/4
592.56257	FRIZIONE COMPLETA D25,4 2MOLLE	002/3 002/4
592.56265	FRIZIONE CTA D19 MOTORI B&S	002/4
592.59555	RUOTA MARGHERITA X 5.00-10"	011/4
592.59563	RUOTA MARGHERITA X 4.00-10"	011/4
592.59567	RUOTA MARGHERITA X 4.00-8"	011/4
592.59578	KIT FLANGIA SUPER-BITE 5.00-10	011/4
592.59580	KIT FLANGIA SUPER-BITE 4.00-10	011/4
922.43685	COPPIA DISTANZ.RUOTE CM6	011/0 011/1 011/2 011/3
		011/4
922.48923	ZAVORRA KG.12 BARRA CENTRALE	011/0 011/1 011/2 011/3
922.57794	PIASTRA GEMELLAGGIO RUOTE	011/4

AGROSAL d.o.o.

codice	denominazione	tavola
300.00001	GREASE NIPPLE M.10	07A/2 07A/3
300.00276	WRENCH	01A/0 01A/1 01A/2 01B/0
300.00277	SWITCH	01A/0 01A/1 01A/2 01B/0
300.00628	CABLE GLAND TYPE DA90/200/30	001/2 001/3
300.00634	MICROSWITCH. STOP COMPL.	08A/0 08A/1 08A/2
300.00635	HEX NUT GALVAN. CEV 3015899	08A/0 08A/1 08A/2
300.00636	MICROSWITCH COVER 3015863CEV	08A/0 08A/1 08A/2
300.10103	SILENTBLOCK	08C/0 08C/1
300.10120	SILENTBLOCK 12X40X58X66-47602	007/2 007/3 07A/0 07A/1
		07A/2 07A/3
300.10142	SILENTBLOCK	009/0 009/1
300.30011	SELF-LUB. BUSHING 12X14X10	05A/0 05C/0 05C/1 05C/2
		05C/3
300.30018	BUSHING	05D/0 05D/1 05D/2
300.40001	PLUG 1/4 GAS UNI 364	003/0 003/1 003/2 003/3
		03A/0 03A/1 03A/2 03B/0
		05D/0 05D/1 05D/2
300.40050	RECTANGULAR TERMINAL 50X40	007/0 007/1
300.40133	PLUG 22 DIN 470 ACC.	03A/0 03A/1 03A/2
311.00003	HEX SCREW 5/16X7/8 UNF 2A AC	002/3 002/4
311.00015	SCREW 3/8X1	002/0 002/1 002/2 002/3
		002/4
311.00786	SCREW M8X30 UNI 5923	002/0 002/1 002/2 002/3
		002/4
311.11086	HEX SCREW M4X25	008/0 008/1 008/2 008/3
		008/4 08B/0 08B/1 08B/2
		08B/3 08C/0 08C/1 08D/0
		08D/1
311.11089	HEX. SCREW M5X10 UNI 5739 8G	05D/0 05D/1 05D/2
311.11090	HEX. SCREW M6X10 UNI 5739 8G	002/1 002/2 003/0 003/1
		003/2 003/3 03A/1 03A/2
		03B/0
311.11091	HEX. SCREW M6X14 UNI 5739 8G	008/0 08C/0 08C/1
311.11092	SCREW TE M6X20 UNI 5739-5S	008/1
311.11097	HEX. SCREW M6X45 UNI 5737 8G	008/0 008/1 008/2 008/3
		008/4 08A/0 08A/1 08A/2
		08B/0 08B/1 08B/2 08B/3
		08C/0 08C/1 08D/0 08D/1
311.11151	HEX. SCREW M8X16 UNI 5739 8G	001/0 001/1 001/2 001/3
		001/4 001/5 01A/0 01A/1
		01A/2 01A/3 07A/0 07A/1
		07A/2 07A/3
311.11216	HEX SCREW M10X70	009/0 009/1
311.11225	HEX SCREW M10X90 UNI 5737 8G	07A/0 07A/1 07A/2 07A/3
311.11229	HEX SCREW M10X110 UNI 5737 8G	007/0 007/1 007/2 007/3
311.12051	SCREW	05B/0
311.12086	HEX SCREW M6X30 UNI 5737 8G	08A/0 08A/1 08A/2
311.12089	HEX. SCREW M6X25 UNI 5739-8G	008/0 008/1 008/2 008/3
		008/4 010/0 010/1 010/2
		08B/0 08B/1 08B/2 08B/3
		08C/0 08C/1 08D/0 08D/1
311.12090	HEX. SCREW M6X16 UNI 5739-8G	010/0 010/1 010/2 05B/0
311.12092	HEX SCREW M6X35 UNI 5739-8G	008/0 008/2 008/3 008/4
		010/0 010/1 010/2 08A/0
		08A/1 08A/2 08B/0 08B/1
		08B/2 08B/3 08D/0 08D/1
311.12147	HEX SCREW M8X18 UNI 5739-8G	005/3
311.12148	HEX. SCREW M8X14 UNI 5739 8G	07A/0 07A/1 07A/2 07A/3
311.12149	HEX. SCREW M8X12 UNI 5739-8G	011/1 011/2 011/3 011/4
		07A/0 07A/1 07A/2 07A/3
311.12150	HEX. SCREW M8X20 UNI 5739-8G	001/0 001/1 001/2 001/3
		001/4 001/5 05D/0 05D/1
		05D/2 09A/0
311.12151	HEX. SCREW M8X25 UNI 5739-8G	003/1 003/2 003/3 011/4
		05D/0 05D/1 05D/2
311.12152	EX. SCREW M8X30 UNI 5739-8G	006/0 03A/0 03A/1 03A/2
		05A/0 05C/0 05C/1 05C/2
		05C/3 05D/0 05D/1 05D/2
		06A/0 09A/0

codice	denominazione	tavola
311.12153	HEX SCREW M8X35 UNI 5739-8G	007/0 007/1 007/2 007/3
		008/0 008/1 008/2 008/3
		008/4 05A/0 05C/1 05C/2
		05D/1 05D/2 07A/0 07A/1
		08A/0 08A/1 08A/2 08B/0
		08B/1 08B/2 08B/3 08C/0
		08C/1 08D/0 08D/1
311.12154	HEX SCREW M8X40	001/0 001/1 001/2 001/3
		001/4 001/5 01A/0 01A/1
		01A/2 01A/3 07A/2 07A/3
311.12210	SCREW TE M10X20 UNI 5739 8G	03A/1 03A/2
311.12211	HEX. SCREW M10X30 UNI 5739-8G	004/0 004/1 004/2 004/3
		004/4 007/0 007/1 007/2
		007/3 04B/0
311.12213	HEX SCREW M10X40 UNI 5739-8G	001/0 001/1 001/2 001/3
		001/4 001/5 01A/3
311.12217	HEX. SCREW M10X80 UNI 5737 8G	07B/0 08C/0 08C/1
311.12219	HEX. SCREW M10X25 UNI 5739-8G	003/2 003/3 011/4
311.12271	HEX. SCREW M12X25 UNI 5739-8G	05C/1 05C/2
311.12272	SCREW TE M12X30 UNI 5739-8G	05C/3
311.12294	SCREW	07B/0
311.12295	HEX SCREW M12X95 UNI 5739 8G	007/2 007/3 07A/0 07A/1
		07A/2 07A/3
311.21007	SCREW M8X20 ISO 7380 8G	001/3 001/4 001/5
311.21010	SCREW M6X25 UNI 7380 8G	08A/0 08A/1 08A/2
311.21558	SCREW M6X16	01B/0
311.32562	SCREW M6X16	03A/0 03A/1 03A/2
311.52044	SCREW M4X35 UNI5931 8G	08A/0 08A/1 08A/2 08D/0
		08D/1
311.52060	SCREW M6X30 UNI 5931-	02A/0
311.52063	SCREW TCCEI M6X20 UNI 5931 8G	08A/0 08A/1 08A/2 08D/0
		08D/1
311.52065	SCREW TCCEI M6X40 UNI 5931 8G	08A/0 08A/1 08A/2 08D/0
		08D/1
311.52085	SCREW TCCEI M8X25 UNI 5931 8G	010/0 010/1 010/2 02A/0
		05B/0
311.52103	SCREW M10X25	003/1 003/2 003/3 03A/1
		03A/2
311.61043	PHILLIPS SCREW M 4X30 UNI6107	01A/0 01A/1 01A/2
312.01212	HEX NUT INS.M12 UNI 5593 6S	09A/0
312.11040	NUT M4 UNI 5588-5S	008/0 008/1 008/2 008/3
		008/4 01A/0 01A/1 01A/2
		08B/0 08B/1 08B/2 08B/3
		08C/0 08C/1 08D/0 08D/1
312.11060	NUT M6 UNI 5588-5S	01A/0 01A/1 01A/2 07A/0
		07A/1 07A/2 07A/3 08A/0
		08A/1 08A/2
312.11080	NUT M8 UNI 5588-5S	001/0 001/1 001/2 002/0
		002/1 002/2 002/3 002/4
		007/0 007/1 007/2 008/0
		008/1 008/2 008/3 008/4
		010/0 010/1 010/2 08A/0
		08A/1 08A/2 08B/0 08B/1
		08B/2 08B/3 08C/0 08C/1
		08D/0 08D/1
312.11100	NUT M 10 UNI 5588 6S	003/1 005/0 005/1 005/2
		005/3 006/0 011/0 011/1
		011/2 011/3 011/4 05B/0
		05D/0 05D/1 05D/2 06A/0
312.21121	NUT M12x1,25 UNI 5587 6S	003/0 003/1 003/2 003/3
		03A/0 03A/1 03A/2 03B/0
312.41041	LOCKING NUT M4 DEFOR.6S	08A/0 08A/1 08A/2 08D/0
		08D/1
312.41060	LOCKNUT M 6	008/0 008/1 008/2 008/3
		008/4 01A/0 01A/1 01A/2
		01B/0 010/0 010/1 010/2
		08A/0 08A/1 08A/2 08B/0
		08B/1 08B/2 08B/3 08C/0
		08C/1 08D/0 08D/1

BCS

600 serie 94

INDICE DEI CODICI

PART NUMBER INDEX
INDICE DE LOS CODIGOS
INDEX DES REFERENCES
INDEX DER TEILNUMMERN

IC1 Rev. 0

1/2004

2BNNE

AGROSAL d.o.o.

codice	denominazione	tavola
312.41061	SELF-LOCKING NUT M6	008/0 008/1 008/2 008/3
		008/4
312.41080	LOCKNUT M 8	001/0 001/1 001/2 001/3
		001/4 001/5 003/0 003/1
		003/2 003/3 006/0 007/0
		007/1 007/2 007/3 01A/0
		01A/1 01A/2 01A/3 01B/0
		011/4 03A/0 03A/1 03A/2
		03B/0 06A/0 07A/0 07A/1
		07A/2 07A/3 08A/0 08A/1
		08A/2 08C/0 08C/1 09A/0
312.41085	LOCKING NUT M8 DEFORM.6S	003/0 003/1 003/2 003/3
		009/0 009/1 009/2 009/3
		009/4 03A/0 03A/1 03A/2
		03B/0 05B/0 09A/0
312.41100	LOCKNUT M 10	001/0 001/1 001/2 001/3
		001/4 001/5 007/0 007/1
		007/2 007/3 009/0 009/1
		01A/3 011/4 05D/1 05D/2
		07B/0 08C/0 08C/1
312.41101	LOCKNUT M10 LOW	07A/0 07A/1 07A/2 07A/3
312.41120	SELF-LOCKING NUT M12	005/0 005/1 005/2 005/3
		011/4 07B/0
312.41121	SELF-LOCKING NUT M12 LOW	007/2 007/3 07A/0 07A/1
		07A/2 07A/3
313.12078	STUD M8X32X14X14 8G	03B/0
313.12080	STUD M8X46X20X12	006/0 06A/0
313.12082	STUD M8X38X14X20	003/0 003/1 003/2 003/3
		009/0 009/1 009/2 009/3
		009/4 03A/0 03A/1 03A/2
		09A/0
313.12083	STUD M8X46X16X16	002/1 002/2 002/3 002/4
313.12084	STUD M8X58X16X16 8G	003/0 003/1 003/2 003/3
		03B/0
313.12085	STUD M8x80x28x16 8G	003/2 03B/0
313.12086	STUD M8X56X20X14 8G	03A/0 03A/1 03A/2
313.12088	STUD M8X40X14X14	002/0 002/1 002/2 002/3
		002/4 03B/0
313.12094	STUD M8X70X16X16 8G	003/0 003/1 003/2 003/3
		03A/0 03A/1 03A/2
313.12101	STUD M10X37X19X15 8G	003/1
313.12102	STUD M10X40X22X14 8G	005/0 005/1 005/2 005/3
		006/0 011/0 011/1 011/2
		05B/0 05D/0 05D/1 05D/2
		06A/0
313.12103	STUD M10X46X24X16 8G	011/3 011/4
313.12124	STUD 56XM12X1.25X26XM12X22 8G	003/0 003/1 003/2 003/3
		03A/0 03A/1 03A/2
313.12125	STUD 64xM12x1,25x26xM12x30 8G	003/1 003/2 003/3 03A/1
		03A/2 03B/0
314.00190	SHIM SS 26x37/2 DIN 988	05D/0 05D/1 05D/2
314.00192	SHIM PS 30x42/1,5 DIN 988	05D/0 05D/1 05D/2
314.11043	FLAT WASHER 4.3 UNI 1733	008/0 008/1 008/2 008/3
		008/4 08B/0 08B/1 08B/2
		08B/3 08C/0 08C/1 08D/0
		08D/1
314.11064	WASHER P.6,4X12,5 UNI 6592	002/1 002/2 008/1 008/2
		008/3 008/4 01A/0 01A/1
		01A/2 08A/0 08A/1 08A/2
		08B/0 08B/1 08B/2 08B/3
		08C/0 08C/1
314.11066	PLAT WASHER 6,6x18 UNI 6593 ACC.	001/0 001/1
314.11084	WASHER P.8,4X17 UNI 6592	001/0 001/1 001/2 001/3
		001/4 001/5 006/0 008/0
		008/1 008/2 008/3 008/4
		01A/0 01A/1 01A/2 01A/3
		06A/0 07A/0 07A/1 07A/2
		07A/3 08B/0 08B/1 08B/2
		08B/3

codice	denominazione	tavola
314.11090	FLAT WASHER 9X24 UNI 6593	05D/0 05D/1 05D/2
314.11104	FLAT WASHER10.5X18 UNI6592AC.	001/0 001/1 001/2 001/3
		001/4 001/5 009/0 009/1
		009/2 009/3 009/4 01A/3
		07A/0 07A/1 07A/2 07A/3
		09A/0
314.14130	FLAT WASHER 13 UNI 1749 ACC.	07A/2 07A/3
314.21062	TOP WASHER 5 DIN 6796	05B/0
314.21083	SUPER WASHER 8 DIN6796 GALV.	001/0 001/1 001/2 001/3
		001/4 001/5 003/0 003/1
		003/2 003/3 009/0 009/1
		009/2 009/3 009/4 01B/0
		03A/0 03A/1 03A/2 03B/0
		05A/0 05B/0 05C/0 05C/1
		05C/2 05C/3 05D/0 05D/1
		05D/2 07A/0 07A/1 07A/2
		07A/3 09A/0
314.21101	TOP WASHER 10	004/0 004/1 004/2 004/3
		004/4 011/4 03A/1 03A/2
		04B/0 05D/0 05D/1 05D/2
314.21130	TOP WASHER 12	005/0 005/1 005/2 005/3
		05C/1 05C/2 05C/3 07B/0
314.21132	TAPERED WASHER	003/2 003/3 03A/2 03B/0
314.22064	SPRING WASHER 6.4 DIN 137	003/0 003/1 003/2 003/3
		010/0 010/1 010/2 02A/0
		03A/1 03A/2 03B/0
314.23043	SPRING WASHER B 4.3	008/0 008/1 008/2 008/3
		008/4 01A/0 01A/1 01A/2
		08B/0 08B/1 08B/2 08B/3
		08C/0 08C/1 08D/0 08D/1
314.23084	SPRING WASHER B 8.4 DIN 137	001/0 001/1 001/2 001/3
		001/4 001/5 002/0 002/1
		002/2 002/3 002/4 003/0
		003/1 003/2 003/3 006/0
		007/0 007/1 007/2 007/3
		008/0 008/1 008/2 008/3
		008/4 01A/0 01A/1 01A/2
		01A/3 01B/0 011/1 011/2
		011/3 011/4 03A/0 03A/1
		03A/2 03B/0 05B/0 06A/0
		07A/0 07A/1 07A/2 07A/3
		08A/0 08A/1 08A/2 08B/0
		08B/1 08B/2 08B/3 08C/0
		08C/1 08D/0 08D/1 09A/0
314.23105	SPRING WASHER B10,5 DIN 137	002/0 002/1 002/2 002/3
		002/4 003/1 005/0 005/1
		005/2 005/3 006/0 009/0
		009/1 011/0 011/1 011/2
		011/3 011/4 05B/0 05D/0
		05D/1 05D/2 06A/0 07A/0
		07A/1 07A/2 07A/3 07B/0
		08C/0 08C/1
314.23130	SPRING WASHER B 13 DIN 137	003/0 003/1 007/2 007/3
		011/4 03A/0 03A/1 07A/0
		07A/1 07A/2 07A/3 09A/0
314.24084	SPRING WASHER A8,4 UNI 1751	005/3
314.31054	TOOTHD LOCKWASH.OUTS.6 UNI3703	08A/0 08A/1 08A/2
314.40004	SPRING WASHER FOR PIN D-4	07A/0 07A/1 07A/2 07A/3
315.10100	TAPPING SCREW HEX 6.3X19	001/0 001/1 001/2 001/3
		001/4 001/5
315.10640	SCRW TAPPING 6.3X32 UNI6950 B	001/0 001/1
341.10020	COTTER PIN 2X12 UNI 1336	008/4
341.10028	COTTER PIN 3X15 UNI 1336 ACC.	009/0 009/1 009/2 009/3
		009/4 07A/0 07A/1 07A/2
		07A/3 09A/0
341.10030	COTTER PIN 3X20 UNI 1336	05D/0 05D/1 05D/2
342.11025	SPLIT PIN 2.5X22 DIN 1481	04A/0 04A/1 04A/2
342.11028	SPLIT PIN 3X18 DIN 1481	07B/0
342.11029	SPRING SPIGOT 3X16DIN1481 ACC	009/0 009/1 009/2 009/3

AGROSAL d.o.o.

codice	denominazione	tavola
		009/4
342.11040	SPLIT PIN 4X20 DIN 1481	08B/1 08B/2 08B/3
342.11041	SPLIT PIN 4X35	07B/0
342.11042	SPLIT PIN 4X25	004/0 004/1 004/2 004/3
		004/4 04B/0
342.13020	SPLIT PIN 4X20 SPIROL	008/0 008/1 008/2 008/3
		008/4 009/0 009/1 009/2
		009/3 009/4 05B/0 07A/0
		07A/1 07A/2 07A/3 08A/0
		08A/1 08A/2 08B/0 08B/1
		08B/2 08B/3 08C/0 08C/1
		08D/0 08D/1 09A/0
342.13022	SPLIT PIN SW 3X22 SPIROL	07A/0 07A/1 07A/2 07A/3
		09A/0
342.13024	SPLIT PIN 4X24 SPIROL	07A/0 07A/1 07A/2 07A/3
		09A/0
342.13060	SPLIT PIN 6X24 SPIROL	004/0 004/1 004/2 004/3
		004/4 04A/0 04A/1 04A/2
		04B/0
342.13061	SPLIT PIN 6X20 SPIROL U.6876	004/0 004/1 004/2 004/3
		004/4 04A/0 04A/1 04A/2
		04B/0 09A/0
342.21056	PARALLEL PIN 6X20 UNI 1707	05D/0
342.21070	PARALLEL PIN	07B/0
343.11040	KEY 4X6.5 UNIM 99	05D/0 05D/1 05D/2
343.11060	KEY 6X10 UNI 6606	005/0 005/1 005/2 005/3
351.11047	SNAP RING INSIDE D 47 DIN 472	006/0 06A/0
351.11052	INSIDE SEEGER D 52 DIN 472	005/0 005/1 005/2 005/3
		04A/0 04A/1 04A/2 04B/0
		05A/0 05B/0 05C/0 05C/1
		05C/2 05C/3
351.11053	SNAP RING INS.D52 PES.UNI7438	004/0 004/1 004/2 004/3
		004/4
351.11055	SNAP RING INS.D 55 DIN 472	004/0 004/1 004/2 004/3
		004/4 04A/0 04A/1 04A/2
		04B/0
351.21024	SNAP RING OUTSIDE D 24 DIN471	05A/0 05C/0 05C/1 05C/2
		05C/3 05D/0 05D/1 05D/2
351.21026	SNAP RING OUTSIDE D 26 DIN471	05D/0 05D/1 05D/2
351.21030	OUTSIDE SEEGER D 30 DIN 471	05D/0 05D/1 05D/2
351.21031	SNAP RING OUTS.30 S.HVY U7436	004/0 004/1 004/2 004/3
		004/4 04A/0 04A/1 04A/2
		04B/0
351.31026	SNAP RING OUTS. 25X2 UNI 7436	05B/0
352.11070	SPLIT RING OUTSIDE 7 UNI7434	08A/0 08A/1 08A/2
352.11120	SPLIT RING	004/0 004/1 004/2 004/3
		004/4 04A/0 04A/1 04A/2
		04B/0
371.11150	BEARING 15X35X11 6202	004/0 004/1 004/2 004/3
		004/4 04A/0 04A/1 04A/2
		04B/0
371.11152	BEARING 63-02-15X42X13	004/0 004/1 004/2 004/3
		004/4 04A/0 04A/1 04A/2
		04B/0
371.11200	BEARING 20X42X12 6004	05D/0 05D/1 05D/2
371.11201	BEARING 20X47X14 6204	05D/0 05D/1 05D/2
371.11202	BEARING 20X52X15 6304	006/0
371.11250	BEARING 25X52X15 6205	004/0 004/1 004/2 004/3
		004/4 005/0 005/1 005/2
		005/3 04A/0 04A/1 04A/2
		04B/0 05A/0 05C/0 05C/1
		05C/2 05C/3 06A/0
371.11253	BEARING 25X47X12 6005	006/0 06A/0
371.11300	BEARING 30X62X16 6206	05D/0 05D/1 05D/2
371.12171	BEARING SKF17X40X12 6203 ST	02A/0
371.12173	BEAR.6203 2RS/C3 17X40X12 SKF	002/0 002/1 002/2 002/3
		002/4
371.12229	BEARING 6006 30X55X13 SKF	004/0 004/1 004/2 004/3
		004/4 04A/0 04A/1 04A/2

codice	denominazione	tavola
		04B/0
371.12230	BRNG.30X55X13 6006 2RS ST	05B/0 05D/0 05D/1 05D/2
371.12231	BRNG.6204 2RS1 C320X47X14 SKF	002/3 002/4
371.12233	BEARING 6006 2RS1 SKFC3	002/0 002/1 002/2 002/3
		002/4
371.12250	BRG 25X52X15 6205 2RS ST	05B/0
371.41250	BEARING	004/1 004/2 004/3 004/4
373.20120	RETAINER K12X15X10 H	004/0 004/1 004/2 004/3
		004/4 04A/0 04A/1 04A/2
		04B/0
379.10832	BALL 1/4 RIV RB 6.35	004/0 004/1 004/2 004/3
		004/4 04A/0 04A/1 04A/2
		04B/0
379.11532	BALL 15/32 RIV RB 11.906	009/0 009/1 009/2 009/3
		009/4 07A/0 07A/1 07A/2
		07A/3 09A/0
381.11191	OR 115 11,91X2,62	05A/0 05B/0 05C/0 05C/1
		05C/2 05C/3 07A/2 07A/3
381.11400	OR 2056 14.00X1.78	006/0 06A/0
381.11800	OR 4075 18.64X3.53	05C/0 05C/1 05C/2 05C/3
381.12817	OR 4112 28.17X3.53	07A/0 07A/1 07A/2 07A/3
382.02003	OIL SEAL 40X52X7	05D/0 05D/1 05D/2
382.02502	OIL SEAL DH1 14X18X3 A	009/0
382.11400	OIL SEAL 14X22X4	009/0 009/1 009/2 009/3
		009/4 07A/0 07A/1 07A/2
		07A/3 09A/0
382.11500	OIL SEAL 15X28X6	003/0 003/1 003/2 003/3
		03B/0 04A/1 04A/2 04B/0
382.11501	OIL SEAL 15X40X10 NORMAL	04A/0
382.12501	OIL SEAL 25X52X10 NORMAL	005/0 005/1 005/2 005/3
		05A/0
382.13002	OIL SEAL 30X40X7 NORMAL	006/0 06A/0
382.13003	OIL SEAL 30X47X7 NORMAL	05D/0 05D/1 05D/2
382.13501	OIL SEAL 35X52X8 NORMAL	05C/0
382.13503	OIL SEAL 35X52X8 RP ROLF	05C/1 05C/2 05C/3
382.13800	OIL SEAL 38X55X7	004/0 004/1 004/2 004/3
		004/4 04A/0 04A/1 04A/2
		04B/0
391.13501	TYRE 21X11.00-8	011/2 011/3 011/4
391.13502	TYRE 3.50-8 2PR TRAC.	011/0 011/1 011/2 011/3
		011/4
391.14008	TYRE TRACTOR 4.00X8 2PR	011/0 011/1 011/2 011/3
		011/4
391.14010	TYRE TRACTOR 4.0-10 2PR	011/0 011/1 011/2 011/3
		011/4
391.15010	TYRE 5.0X10	011/0 011/1 011/2 011/3
		011/4
391.16018	TYRE 6.5/80-12	011/1 011/2 011/3 011/4
391.18020	TYRE 20X8,00-10	011/0 011/1 011/2 011/3
394.13502	TUBE 3,50 8P.	011/0 011/1 011/2 011/3
		011/4
394.14008	TUBE 4.00X8	011/0 011/1 011/2 011/3
		011/4
394.14010	TUBE 4.0-10	011/0 011/1 011/2 011/3
		011/4
394.15010	TUBE 5.0-10	011/0 011/1 011/2 011/3
		011/4
394.16018	TUBE 6.5/80X12	011/1 011/2 011/3 011/4
509.47833	SHORT CLUTCH LEVER	002/0 002/1 002/2 002/3
509.56262	CLUTCH LEVER ELECTRIC	002/4
513.56610	GEARBOX FLANGE	05C/3
521.48105	LONG CLUTCH CONE	02A/0
523.47820	STEERING CLUTCH HALF-AXLE	05B/0
523.47821	STEERING CLUTCH HUB	05B/0
523.47853	STEERING CLUTCH YOKE	05B/0
523.47857	BEARING CARRIER HUB	05B/0
523.56559	EXTERNAL CLUTCH CONE	05D/0 05D/1 05D/2
523.57250	PTO PINION	009/0 009/1 009/2 009/3
		009/4 07A/0 07A/1 07A/2

AGROSAL d.o.o.

codice	denominazione	tavola
		07A/3 09A/0
524.43852	RIGHT LONG HALF-AXLE	006/0
524.43853	LEFT SHORT HALF-AXLE	006/0
524.47896	CONE PRESSURE PLATE	002/0 002/1 002/2 002/3
		002/4
524.48182	INCREASED SIZE COUPLE	006/0
524.48187	LEFT SHORT HALF-AXLE D-25	06A/0
524.48188	RIGHT LONG HALF-AXLE D-25	06A/0
524.56335	PTO SHAFT	04A/0 04A/1 04A/2 04B/0
524.56336	PTO SHAFT	004/0 004/1 004/2 004/3
		004/4
524.56339	CLUTCH SHAFT	04A/0 04A/1 04A/2 04B/0
524.56340	CLUTCH SHAFT	004/0 004/1 004/2 004/3
		004/4
524.56341	DISC CLUTCH SHAFT	004/4
524.56344	REVERSE SPEED GEAR SUPPORT	004/0 004/1 004/2 004/3
		04B/0
524.56349	REVERSE SPEED GEAR SUPPORT	004/4
524.56354	GEARBOX 1ST GEAR	004/0 004/1 004/2 004/3
		004/4 04A/0 04A/1 04A/2
524.56355	SPEED SLIDING GEAR	04B/0
524.56356	SLIDER GEARS 1+1	04A/0 04A/1 04A/2
524.56359	SLIDER GEARS	004/0 004/1
524.56360	SPEED SLIDING GEAR 4+3	004/2 004/3 004/4
524.56362	PTO COUPLE	004/0 004/1 004/2 004/3
		004/4 04A/0 04A/1 04A/2
		04B/0
524.56370	REVERSER SLIDER	004/0 004/1 004/2 004/3
		004/4 04B/0
524.56389	GEAR SLIDER LEVER	004/0 004/1 004/2 004/3
		004/4 04A/0 04A/1 04A/2
		04B/0
524.56390	PTO SLIDER LEVER	004/0 004/1 004/2 004/3
		004/4 04A/0 04A/1 04A/2
		04B/0
524.56556	CLUTCH SHAFT	05D/0 05D/1 05D/2
524.56560	AXLE,HALF	05D/0 05D/1 05D/2
524.56564	GEAR	05D/0 05D/1 05D/2
524.56567	COGGED DISK	05D/0 05D/1 05D/2
530.48656	OVAL TRADEMARK	012/0 012/1 07A/0 07A/1
		07A/2 07A/3
531.43128	TOP COVER WITH M10 HOLE	003/1 03A/1 03A/2
531.43712	WHEEL SPACER	011/0 011/1 011/2 011/3
		011/4
531.43875	GEARBOX COVER F.DIFFERENTIAL	003/0 003/1 003/2 003/3
531.43879	CLOSED GEARBOX COVER	003/0 003/1 003/2 003/3
		03A/0 03A/1 03A/2
531.47482	ENGINE FLANGE VANGUARD 12.5CV	002/0 002/1 002/2
531.48107	LONG CLUTCH BELL HOUSING	02A/0
531.56150	ENGINE FLANGE B&S 8HP I/P	002/2 002/3 002/4
531.56325	GEARBOX CASING	03A/0 03A/1 03A/2
531.56326	GEARBOX CASING	003/0 003/1 003/2 003/3
		03B/0
531.56327	GEARBOX CASING (MF 600)	003/0 003/1 003/2 003/3
531.56332	REAR COVER	003/0 003/1 003/2 003/3
		03A/0 03A/1 03A/2 03B/0
531.56342	REVERSE SPEED GEAR SUPPORT	03A/0 03A/1 03A/2
532.43851	HALF-AXLE HUB	006/0 06A/0
532.47468	FLANGE H21 FOR ENGINES 5HP	002/3
532.47488	ENGINE FLANGE H=21	002/4
532.47818	STEERING CLUTCH BOX	05B/0
532.47819	WHEEL AXLE FLANGE	05A/0
532.56551	GEAR BOX FLANGE	05C/0 05C/1
532.56553	FLANGE,INTERMED.	05D/0 05D/1 05D/2
532.56554	COVER	05D/0
532.56601	GEAR BOX FLANGE	05C/2
532.57808	REDUCTION UNIT COVER	05D/1 05D/2
541.43090	CROWN GEAR Z 49 RIGHT-HAND MC	005/1 005/2 005/3
541.43149	CROWN GEAR Z=49 MF L-HAND 2	005/0 005/1 005/2 005/3

codice	denominazione	tavola
		05A/0
541.56482	CROWN GEAR Z=47 RIGHT-HAND	05C/0 05C/1 05C/2 05C/3
551.02678	RING RUBBER	003/0 003/1 003/2 003/3
		03A/0 03A/1 03A/2 03B/0
551.02714	FLAT KNOB	007/0 007/1 007/2 007/3
		07A/0 07A/1 07A/2 07A/3
551.42076	KNOB	009/0 009/1 009/2 009/3
		009/4 07A/0 07A/1 07A/2
		07A/3 09A/0
551.47842	HOOD (FOR CLUTCH LEVER)	002/0 002/1 002/2 002/3
		002/4
551.57609	HOOD	002/4
552.20363	VERLANGERUNSGWELLE MM80	007/0 007/1 007/2 007/3
552.42528	SWIVEL D 10	009/0 009/1 009/2 009/3
		009/4 09A/0
552.43338	CONTROL ROD MOUNT	007/0
552.43340	CUT CONTROL ROD MOUNT	007/1 007/2 007/3 07A/0
		07A/1 07A/2 07A/3 08C/0
		08C/1
552.43592	WHEEL CAP	005/0 005/1 005/2 005/3
552.47636	INSTRUMENT PANEL COLUMN	07A/0 07A/1 07A/2 07A/3
552.47645	GEAR BALL-JOINT MF	07A/0 07A/1 07A/2 07A/3
552.47659	RIGHT HALF-KNOB	08A/0 08A/1 08A/2 08D/0
		08D/1
552.47660	LEFT HALF-KNOB	08A/0 08A/1 08A/2 08D/0
		08D/1
552.47661	KEY	08A/0 08A/1 08A/2 08D/0
		08D/1
552.48036	MOTOR STOP LEVER	008/0
552.48038	MOTOR STOP SHEATH STOP	008/0 008/1 008/2 008/3
		008/4 08A/0 08A/1 08A/2
		08B/0 08B/1 08B/2 08B/3
		08D/0 08D/1
552.48041	LEVER MOTOR-STOP	008/1 008/2 008/3 008/4
		08B/0 08B/1 08B/2 08B/3
		08C/0 08C/1 08D/0 08D/1
552.48072	GEAR UNIT LEVER KNOB	07A/0 07A/1 07A/2 07A/3
552.48283	REVERSER CONTROL LEVER	008/0 008/1 008/2 008/3
		008/4 08A/0 08A/1 08A/2
		08B/0 08B/1 08B/2 08B/3
		08C/0 08C/1 08D/0 08D/1
552.48284	DIFFERENTIAL LOCK LEVER	008/0 008/1 008/2 008/3
		008/4 08B/0 08B/1 08B/2
		08B/3
552.48293	MOTORSTOP LEVER	08A/0 08A/1 08A/2
552.48379	PTO BALL-JOINT	07A/0 07A/1 07A/2 07A/3
		09A/0
552.51686	SUPPORT FOR LEVER	07B/0
552.51688	REGULATING LEVER	07B/0
552.56756	BRAKE CONTROL LEVER	08D/0 08D/1
552.56757	BRAKE CONTROL PULLEY	08D/0 08D/1
552.57255	PTO 3+2 STOP	07A/0
552.57313	REVERSER LEVER ROLLER	07A/1 07A/2 07A/3 09A/0
552.57321	PTO STOP FOR 2-WHEEL TRACTOR	09A/0
552.57322	PTO STOP FOR MOTOR MOWER	07A/1 07A/2 07A/3
552.57525	TOP GUARD MF	001/0 001/1 001/2 001/3
		001/4 001/5
552.57526	CENTRE GUARD MF	001/0 001/1
552.57559	LEFT MUDGUARD	001/1 001/2 001/3 001/4
		001/5
552.57560	RIGHT MUDGUARD	001/1 001/2 001/3 001/4
		001/5
552.57564	COWLING MF 630 WS	001/1
552.57581	BCS BODYGUARD	001/2 001/3 001/4 001/5
561.19937	BATTERY SUPPORT	01A/0 01A/1 01A/2
561.20364	BRAKE PULLEY BUSHING	007/0 007/1 007/2 007/3
561.37370	BATTERY CLAMPING BRACKET	01A/0 01A/1 01A/2 01B/0
561.42314	WASHER12.5X34X4	005/0 005/1 005/2 005/3
561.43059	SPACER	005/0 005/1 005/2 005/3

AGROSAL d.o.o.

codice	denominazione	tavola
		05A/0
561.43121	CENTERING PAD	02A/0
561.43122	SPRING HOLDER BUSHING	02A/0
561.43360	CONTROL ROD	009/0
561.43865	HALF AXLE RING	006/0
561.43878	CLUTCH BRACKET STOP	003/1
561.43880	RELEASE LEVER	006/0 06A/0
561.43883	DIFFERENTIAL SHEATH STOP.	006/0 06A/0
561.47499	EXHAUST MANIFOLD GUARD	002/1 002/2
561.47520	SIDE BOX COVER	003/0 003/1 003/2 003/3
		03A/1 03A/2 03B/0
561.47531	STEERING LEVER STOP BARREL	08A/0 08A/1 08A/2
561.47534	STEERING LEVER STOP	08A/0 08A/1 08A/2
561.47540	STEERING LEVER SPACER	08A/0 08A/1 08A/2
561.47541	STEERING LEVER BARREL	08A/0 08A/1 08A/2
561.47542	STEERING CLUTCH LEVER	08A/0 08A/1 08A/2
561.47560	REVERSE LEVER STOP	07A/0 07A/1 07A/2 07A/3
561.47574	REVERSE BLOCK	07A/0 07A/1 07A/2 07A/3
561.47641	HANDLEBAR "U" BOLT	07A/0 07A/1 07A/2 07A/3
561.47646	GEAR CONTROL ROD	07A/0 07A/1 07A/2 07A/3
561.47648	PTO CONTROL ROD	07A/0 07A/1 07A/2 07A/3
561.47655	DISK CLUTCH LEVER	008/0 008/1 008/2 008/3
		008/4 08B/0 08B/1 08B/2
		08B/3 08C/0 08C/1 08D/0
		08D/1
561.47657	SELF-COOL. CONE CLUTCH LEVER	08A/0 08A/1 08A/2
561.47664	REVERSER GEAR Z-12	07A/0 07A/1 07A/2 07A/3
561.47672	GUIDE PIN	07A/0 07A/1 07A/2 07A/3
561.47703	REVERSER GEAR	07A/0 07A/1 07A/2 07A/3
561.47711	M/S SPRING RETAINER PIN	008/0 008/1 008/2 008/3
		008/4 08B/0 08B/1 08B/2
		08B/3 08C/0 08C/1
561.47845	SELF-COOLING CLUTCH LEVER	002/0 002/1 002/2 002/3
		002/4
561.47863	BRAKE CABLE STOP	05B/0
561.47923	LONG STOP BRACKET	003/1 003/2 003/3 03A/1
		03A/2
561.48037	MOTOR STOP LEVER STOP	008/0 008/1 008/2 008/3
		008/4 08B/0 08B/1 08B/2
		08B/3 08C/0 08C/1 08D/0
		08D/1
561.48184	HALF-AXLE RING	05B/0 06A/0
561.48218	BRAKE DRUM .D 136.	010/0 010/1 010/2
561.48285	PIN	008/0 008/1 008/2 008/3
		008/4 08A/0 08A/1 08A/2
		08B/0 08B/1 08B/2 08B/3
		08C/0 08C/1 08D/0 08D/1
561.48286	DRILLED PIN	008/0 008/1 08A/0 08B/0
561.48287	PIN	008/0 008/1 008/2 008/3
		008/4 08B/0 08B/1 08B/2
		08B/3 08D/0 08D/1
561.48470	LEVER	010/0 010/1 010/2 08D/0
561.49590	BATTERY TIE ROD L=200	01A/0 01A/1 01A/2 01B/0
561.49655	CONTROL ROD	009/0 009/1 009/2 009/3
		009/4
561.49820	CLUTCH DISK	05B/0
561.50361	LEVER SPACER	008/0 008/1 008/2 008/3
		008/4 010/0 010/1 010/2
		08A/0 08A/1 08A/2 08B/0
		08B/1 08B/2 08B/3 08C/0
		08C/1 08D/0 08D/1
561.56119	ACT 280-340 ENGINE GUARD	001/5 01A/3
561.56152	MUFFLER PROTECTION VANG 14HP	002/2
561.56487	WHEELS 3.50-8" SPACER	005/3
561.56488	WHEELS 3.50-8" PROTECTION	005/3
561.56566	STOP SPRING	05D/0 05D/1 05D/2
561.56568	SPACER	05C/0 05C/1 05C/2 05C/3
561.56571	SUPPORT CONTROL LEVER	05D/0 05D/1 05D/2
561.56572	SUPPORT CONTROL LEVER	05D/0 05D/1 05D/2

codice	denominazione	tavola
561.56577	SPACER	05D/0 05D/1 05D/2
561.56585	INTERNAL SPRING STOP	05D/1 05D/2
561.56591	BARREL	08D/0 08D/1
561.56603	LEVER SPACER	08D/1
561.56604	BRAKE AND CLUTCH LEVER	08D/1
561.56940	HANDLEBAR U BOLT	007/0 007/1 007/2 007/3
561.56948	STEERING COLUMN SPRING STOP	007/3
561.56968	LEVER STOP F/HANDLEBAR RELEASE	07A/2 07A/3
561.56990	MOTOR MOWER BODYGUARD	001/3 001/4 001/5
561.57097	HANDLEBAR EXTENSION WS	08A/0 08A/1 08A/2
561.57234	GEAR SELECTOR 1+1	09A/0
561.57235	GEAR SELECTOR MF	009/0 009/1 009/2 009/3
		009/4
561.57239	GEAR SELECTOR	07A/0 07A/1 07A/2 07A/3
561.57244	REVERSE ROD LEVER EXTENSION	009/0 009/1 009/2 009/3
		009/4
561.57246	SHEATH STOP	009/0 009/1 009/2 009/3
		009/4
561.57256	PTO LEVER FOR MF	009/0 009/1 009/2 009/3
		009/4
561.57267	LEVER PTO LONG	07A/0
561.57271	GEAR CONTROL LEVER SHORT	07A/0 07A/1 07A/2 07A/3
		09A/0
561.57274	BLOCK	09A/0
561.57282	PTO ROD FOR MC710/720 WITH AE	09A/0
561.57283	GEAR LEVER FOR 710 ELECTRIC	09A/0
561.57303	SPACER FOR LEVER	07A/0 07A/1 07A/2 07A/3
561.57307	SELECTOR MF 610	009/1 009/2 009/3 009/4
561.57323	SHORT PTO LEVER	09A/0
561.57324	LONG PTO LEVER	07A/1 07A/2 07A/3
561.57332	U-BOLT	008/2 008/3 008/4 08A/1
		08A/2 08B/1 08B/2 08B/3
		08C/0 08C/1 08D/0 08D/1
561.57341	2+2 SPEED SELECTOR	09A/0
561.57353	MF WS2 SPEED SELECTOR	009/4
561.57603	BATTERY SUPPORT	01B/0
561.57606	CLUTCH STOP	003/2 003/3
561.57607	CLUTCH STOP SPACER	003/2 003/3
561.57807	BOTTOM PLATE PROTECTION	05D/1 05D/2
561.57821	STIFFENING BRACKET WS2 (MR2)	05C/1
561.57822	STIFFENING BRACKET WS2	05C/2
561.57834	LOWER SUPPORTING PLATE	05C/3
562.43113	CLUTCH LEVER	02A/0
563.43058	WHEEL SHAFT	005/0 005/1 005/2 005/3
563.43106	PLATE ON BEARING	02A/0
563.47484	CLUTCH SHOULD. WASHER	002/0 002/1 002/2 002/3
		002/4
563.47700	CAP D-8	07A/0 07A/1
563.47854	BEARING COVER	05B/0 05D/0 05D/1 05D/2
563.49782	KOHLER ENGINE KEY	002/0 002/1 002/2 002/3
		002/4
563.51685	HANDLEBAR POSITION ROD	07B/0
563.56165	HONDA ENGINE KEY	002/4
563.56251	CLUTCH SHOULD.WASHER D=19.6	002/3 002/4
563.56328	SCRAPER RING THICKNESS=1.5	004/0 004/1 004/2 004/3
		004/4 04A/0 04A/1 04A/2
		04B/0
563.56329	SCRAPER RING THICKNESS=1.6	004/0 004/1 004/2 004/3
		004/4 04A/0 04A/1 04A/2
		04B/0
563.56330	SCRAPER RING THICKNESS=1.7	004/0 004/1 004/2 004/3
		004/4 04A/0 04A/1 04A/2
		04B/0
563.56331	SCRAPER RING THICKNESS=1.8	004/0 004/1 004/2 004/3
		004/4 04A/0 04A/1 04A/2
		04B/0
563.56348	SCRAPER RING	004/4 04A/0 04A/1 04A/2
563.56924	CAP	07A/2 07A/3
563.59553	THREADED TRAILING PIN	011/4

AGROSAL d.o.o.

codice	denominazione	tavola
563.59554	THREADED JOINING PIN	011/4
564.43857	DIFFERENTIAL SPACER WASHER	006/0
564.43871	ROD	006/0 06A/0
564.48183	CRINKLE SPACER	06A/0
564.48196	FRONT COUPLE	06A/0
564.56347	REVERSER GEAR	004/0 004/1 004/2 004/3
		004/4 04A/0 04A/1 04A/2
		04B/0
564.56350	GEAR PIN Z=15	04A/0 04A/1 04A/2
564.56351	GEAR PIN	004/0 004/1 004/2 004/3
		004/4 04B/0
564.56475	WORM SCREW 2 START	04A/0 04A/1 04A/2 04B/0
564.56477	WORM SCREW 4 START	004/3 004/4
564.56478	WORM SCREW 2 START	004/0 004/1 004/2 004/3
		004/4
564.56569	SHAFT	05C/0 05C/1 05C/2 05C/3
571.48509	GUARD BOTTOM PLATE D=32	07A/0 07A/1 07A/2 07A/3
580.02429	TERMINAL SCREW M 5	006/0 008/0 008/1 008/2
		008/3 008/4 07A/0 07A/1
		07A/2 07A/3 08A/0 08A/1
		08A/2 08B/0 08B/1 08B/2
		08B/3 08C/0 08C/1 08D/0
		08D/1
580.02538	GAS CONTROL LEVER	008/0 008/1 008/2 008/3
		008/4 08A/0 08A/1 08A/2
		08B/0 08B/1 08B/2 08B/3
		08C/0 08C/1 08D/0 08D/1
580.20258	GEAR RELEASE SPRING	09A/0
580.25866	SHIM 0,2 MM	05C/0 05C/1 05C/2 05C/3
580.25867	SHIM 0,3 MM	05C/0 05C/1 05C/2 05C/3
580.25868	SHIM 0,5 MM	05C/0 05C/1 05C/2 05C/3
580.25869	SHIM 1,0 MM	05C/0 05C/1 05C/2 05C/3
580.26222	GAS CABLE & SHEATH AD114	008/0 008/1 008/2 008/3
		008/4 08A/0 08A/1 08A/2
		08D/0 08D/1
580.26321	LEVER RETURN SPRING	07A/0 07A/1 07A/2 07A/3
580.27230	DUST SEAL RING	07A/2 07A/3
580.42067	CABLE TO GAS SHEATH	008/3 008/4 08A/2 08B/3
		08D/0 08D/1
580.42167	SHEATH END	006/0 008/0 008/1 008/2
		008/3 008/4 05B/0 07A/0
		07A/1 07A/2 07A/3 08B/0
		08B/1 08B/2 08B/3 08C/0
		08C/1
580.42200	CLAMPING SCREW M 6	008/0 010/0 010/1 010/2
		05B/0 08C/0 08C/1
580.42202	ADJUSTING SCREW M 8	008/0 008/1 008/2 008/3
		008/4 010/0 010/1 010/2
		08A/0 08A/1 08A/2 08B/0
		08B/1 08B/2 08B/3 08C/0
		08C/1 08D/0 08D/1
580.42219	SPRING	07B/0
580.43031	RUBBER BUMPER USA	01A/0 01A/1 01A/2
580.43032	SHOCKPR. BEARING SERIES BAT.	01A/0 01A/1 01A/2
580.43034	ELECTR. START HARNESS MC 715	01A/0 01A/1 01A/2
580.43036	RECTIFIER	01A/0 01A/1 01A/2
580.43053	PARALLEL PIN D 6X20	003/0 003/1 003/2 003/3
		03A/0 03A/1 03A/2 03B/0
		05D/1 05D/2
580.43086	PAD	004/0 004/1 004/2 004/3
		004/4 04A/0 04A/1 04A/2
		04B/0
580.43110	CLUTCH SPRING	02A/0
580.43117	COVER SEAL	003/0 003/1 003/2 003/3
		03A/0 03A/1 03A/2
580.43129	BELLOWS	02A/0
580.43176	SPRING	009/0 009/1 009/2 009/3
		009/4 07A/0 07A/1 07A/2
		07A/3

codice	denominazione	tavola
580.43216	CLUTCH SHEATH & CABLE	08B/0 08B/1 08B/2 08B/3
580.43219	GAS CABLE & SHEATH L = 1680	08B/0 08B/1 08B/2 08B/3
580.43223	CLUTCH SHEATH & CABLE L 930	008/2 008/3 008/4
580.43250	DISK WHEEL 2.50-8	011/0 011/1 011/2 011/3
		011/4
580.43344	CABLES FOR ALN330	08A/0 08A/1 08A/2 08D/0
		08D/1
580.43370	RIM 2.50-8 FOR 601	011/0 011/1 011/2 011/3
		011/4
580.43391	LEVER WITH STOP D-28	008/0 008/1
580.43855	SEAL	006/0 06A/0
580.43874	SPRING	006/0 06A/0
580.43881	SPRING	006/0 06A/0
580.44804	RIM 5JA-12" VAR.TREAD	011/1 011/2 011/3 011/4
580.45804	WARNING LIGHT COBO 4706953	01B/0
580.46901	STICKER	012/0 013/0
580.46902	STICKER	012/0 013/0
580.46903	STICKER	012/0 013/0
580.46909	STICKER	012/0 013/0
580.46910	STICKER	012/0 013/0
580.46912	STICKER	012/0 013/0 013/1
580.46913	STICKER	012/0 013/0 013/1
580.46952	STICKER	012/0 013/0
580.46953	STICKER	012/0 013/0
580.47543	SPRING FOR CLUTCH LEVERS	08A/0 08A/1 08A/2
580.47567	SPRING FOR LEVER STOP RH	08A/0 08A/1 08A/2
580.47568	UNIFIED MOTOR-STOP HARNESS	08B/0 08B/1 08B/2 08C/0
580.47569	SPRING FOR LEVER STOP LH	08A/0 08A/1 08A/2
580.47624	HANDLEBAR RELEASE SPRING	07A/0 07A/1 07A/2 07A/3
580.47629	SHEATH & CABLE L=1080 W/CORE	08A/1 08A/2 08C/0 08C/1
580.47647	SHEATH & CABLE L=1280 W/CORE	08B/0 08B/1 08B/2 08B/3
580.47649	HOOK	010/0 010/1 010/2 08D/1
580.47662	MICROSWITCH CHERRY D453-RGAD	08A/0 08A/1 08A/2 08D/0
		08D/1
580.47665	HANDLEBAR HARNESS EL.M/STOP	08A/0 08A/1 08A/2
580.47671	INVERTER SPRING	07A/0 07A/1 07A/2 07A/3
580.47701	CAP SPRING	07A/0 07A/1 07A/2 07A/3
580.47702	STEER.COLUMN CABLE MC 737	07A/0 07A/1 07A/2 07A/3
580.47712	M/STOP SPRING COMPL.DIRECT	008/0 008/1 008/2 008/3
		008/4 08B/0 08B/1 08B/2
		08B/3 08C/0 08C/1 08D/0
580.47721	MOTOR HARNESS EL.	08A/0 08A/1 08A/2
580.47731	STEER.COLUMN STICKER MF	012/0 013/0 013/1 07A/0
		07A/1 07A/2 07A/3
580.47875	INSIDE CLUTCH SPRING	05D/1 05D/2
580.47885	SPRING	05D/0 05D/1 05D/2
580.48000	KNOB D=27 GLISSA	008/0 008/1 008/2 008/3
		008/4 08A/0 08A/1 08A/2
		08B/0 08B/1 08B/2 08B/3
		08C/0 08C/1 08D/0 08D/1
580.48002	CLAMPING SCREW M4	008/0 008/1 008/2 008/3
		008/4 08B/0 08B/1 08B/2
		08B/3
580.48005	SHEATH CABLE	008/1 008/2 008/3 008/4
		08A/0 08A/1 08A/2 08D/0
		08D/1
580.48009	STOP SWITCH	008/0 008/1 008/2 008/3
		008/4 08B/0 08B/1 08B/2
		08B/3 08C/0 08C/1 08D/0
		08D/1
580.48012	GAS SHEATH & CABLE - 1850	08B/0 08B/1 08B/2 08C/0
		08C/1
580.48025	SHEATH CABLE	008/0
580.48124	ELECT. START HARNESS	01A/0 01A/1 01A/2
580.48214	BLOCK	010/0 010/1 010/2
580.48215	SPRING	010/0 010/1 010/2
580.48295	SPECIAL RETURN SPRING	08A/0 08A/1 08A/2
580.48301	DIFFER. LOCK SHEATH & CABLE	010/2
580.48330	RIM 3.50 D 10" VAR.TREAD COMP	011/0 011/1 011/2 011/3

AGROSAL d.o.o.

codice	denominazione	tavola
		011/4
580.48331	RIM 6.00 1-10"	011/0 011/1 011/2 011/3
580.49501	MOTOR STOP CABLE-SHEATH	08B/0 08B/1 08B/2 08B/3
580.49663	SHEATH CABLE	010/1 010/2
580.49670	SHEATH CABLE	08A/0 08A/1 08A/2 08D/0
		08D/1
580.49815	DISK CLUTCH SPRING	05B/0
580.49822	DISK	05B/0
580.49830	CAP SPRING	07A/2 07A/3
580.50345	SPRING FOR LEVER	008/0 008/1 008/2 008/3
		010/0 010/1 010/2 08A/0
		08A/1 08A/2 08B/0 08B/1
		08B/2 08C/0
580.51670	LEVER HOOK	008/0 008/1 008/2 008/3
		008/4 08A/0 08A/1 08A/2
		08B/0 08B/1 08B/2 08B/3
		08C/0 08C/1 08D/0 08D/1
580.52303	MOTOR STOP SHEATH & CABLE	008/0
580.52304	M/STOP HARNESS MF	008/0 008/1 008/2 008/3
580.56154	SPRING FOR HONDA G160 THROTTLE	008/4
580.56155	SPRING FOR HONDA G240 THROTTLE	08B/3 08C/1
580.56391	PTO SLIDING SPRING	004/0 004/1 004/2 004/3
		004/4 04A/0 04A/1 04A/2
		04B/0
580.56562	SHIM 0,2 MM	05C/0 05C/1 05C/2 05C/3
580.56563	SHIM 0,3 MM	05C/0 05C/1 05C/2 05C/3
580.56580	CLUTCH TRANSMISSION	08D/0 08D/1
580.56581	SHEATH & CABLE	08D/0 08D/1
580.56582	SHIM 1	05C/1 05C/2 05C/3
580.56590	MOTOR STOP HARNESS	08D/0
580.56593	SPRING FOR CLUTCH LEVER	008/4 08B/3 08C/1 08D/0
		08D/1
580.56594	STICKER 630 WS/2	012/1
580.56595	ADJUSTING SCREW	08D/0 08D/1
580.56596	MOTOR STOP CABLES	08D/1
580.56605	CLUTCH LEVER SPRING	08D/1
580.56606	MOTORSTOP SPRING WS2	08D/1
580.56942	HANDLEBAR RELEASE SPRING	007/0 007/1 007/2 007/3
580.56991	BODYGUARD CAP SUPPORT	001/4 001/5
580.57232	SPRING FOR GEARSTICK	07A/0 07A/1 07A/2 07A/3
		09A/0
580.57247	CAP SPRING	009/0 009/1 009/2 009/3
		009/4
580.57263	CLAMP.SCREW M5 F/ ACME MOTORS	008/0 008/1 008/2 008/3
		008/4 08A/0 08A/1 08A/2
		08B/0 08B/1 08B/2 08B/3
		08D/0 08D/1
580.57266	SHEATH SUPPORT	07B/0
580.57273	INVERTER SPRING MC720/730	09A/0
580.57286	INVERT.SHEATH & CABLE L=1010	08C/0 08C/1
580.57287	DIFFER.SHEATH & CABLE L=1080	008/0
580.57288	GAS SHEATH & CABLE L=1380	008/0
580.57289	BRAKE SHEATH & CABLE L=1100	008/2 008/3 008/4 010/0
		010/1
580.57290	DIFFER. SHEATH & CABLE L=825	008/1
580.57291	BAR SHEATH & CABLE	008/0 008/1
580.57292	GAS SHEATH & CABLE L=1450	008/0
580.57293	GAS SHEATH & CABLE L=1100	008/0 008/1 008/2 008/3
		008/4 08A/0 08A/1 08A/2
580.57294	GAS SHEATH & CABLE L=1150	008/0
580.57295	GAS SHEATH & CABLE L=1060	008/0 008/1 008/2 008/3
		008/4 08A/0 08A/1 08A/2
		08D/0 08D/1
580.57296	CORE SHEATH & CABLE L=860	008/0 008/1 08D/0 08D/1
580.57297	INVERT.SHEATH & CABLE L=1000	008/0 008/1
580.57302	CABLE AND SHEATH L=800	008/1 008/2 008/3 008/4
		08A/0 08A/1 08A/2
580.57306	SHEATH & CABLE (L=1300) GAS	008/1 008/2 008/3 008/4
		08A/0 08A/1 08A/2 08D/0

codice	denominazione	tavola
		08D/1
580.57333	SHEATH & CAB. (L=800) DIFFER.	008/2 008/3 008/4
580.57334	BAR RELEASE LEVER	008/2 008/3 008/4
580.57336	SHEATH & CAB. (L=2015) GAS	08B/2 08B/3
580.57343	CABLE AND SHEATH (L=1350)	08B/3
580.57350	SHEATH & CABLE (L=2150) GAS	08B/3
580.57384	CABLE	01B/0
580.57385	MOTOR STOP CABLE FOR GX	01A/3
580.57386	MOTOR HARNESS	01B/0
580.57401	MOTOR STOP CABLES	08B/3 08C/1
580.57402	MOTOR STOP CABLES	008/4
580.57610	BATTERY COVER	01B/0
580.57611	ANTISHOCK BATTERY SET	01B/0
580.57676	STICKER	013/0 013/1
580.57678	STICKER	012/0 013/0 013/1
580.57680	STICKER	012/1
580.57684	STICKER	012/0 012/1
580.57685	STICKER	012/0 012/1
580.57686	STICKER	012/0 012/1
580.57687	STICKER	012/0 012/1
580.57698	STICKER	009/2 009/3 009/4 012/0
		013/0 013/1
580.57703	STICKER	012/0 012/1
580.57705	STICKER	012/0 012/1
580.57706	SPEED STICKER FOR MOTOR MOWER	012/0 013/0 013/1 07A/0
		07A/1 07A/2 07A/3
580.57707	STICKER	012/0 012/1
580.57709	STICKER	012/0 012/1
580.57712	STICKER	012/0 013/0 013/1
580.57714	GEAR STICKER 4+3 (FOR 57270)	009/2 009/3 009/4 012/0
		013/0 013/1
580.57722	STICKER	012/0 013/0 013/1
580.57724	STICKER, INSTRUCTION MANUAL	012/0 013/0 013/1
580.57729	STICKER 615	012/1
580.57730	STICKER 615 L	012/1
580.57731	STICKER 615 S	012/1
580.57732	SPEED STICKER 2+2	013/0 013/1
580.57767	STICKER "DANGER FOR REFUELING"	013/1
580.57768	STICKER "WARNING FOR TEMP."	013/1
580.57770	CLUTCH STICKER	013/1
580.57771	STICKER MOTOR STOP + STARTER	013/1
580.57772	STICKER MOTOR STOP + STARTER	013/1
580.57776	WHEEL RIM 8.50-8	011/2 011/3
580.57785	"SUPER-BITE" WHEEL	011/2 011/3
580.57786	"SUPER-BITE" WHEEL	011/2 011/3
580.57787	"SUPER-BITE" WHEEL	011/2 011/3
580.57790	COUPLER FOR "SUPER-BITE" WHEEL	011/3
580.57795	TYRE 8,50-8	011/4
580.59211	STICKER BCS	012/0 012/1
581.00052	BOSCH RELAY 0332002160	01A/0 01A/1 01A/2
581.47704	ADJUSTING SCREW M.6	07A/0 07A/1 07A/2 07A/3
		08B/3 08C/1
581.50313	BARREL	008/0 008/1 008/2 008/3
		008/4 010/0 010/1 010/2
		08A/0 08A/1 08A/2 08B/0
		08B/1 08B/2 08B/3 08C/0
		08C/1 08D/0 08D/1
581.56156	CLAMP (THROTTLE)	08B/3 08C/1
581.57346	BARREL	008/4
590.15425	CAP WITH MEASURING ROD	003/0 003/1 003/2 003/3
		03A/0 03A/1 03A/2 03B/0
590.43046	MOT HOOD LDA 520 MF 715 C	001/0 01A/0 01A/1 01A/2
590.43063	WHEEL HUB WITH STUD	005/0 005/1 005/2 005/3
590.43773	DRIVE PULLEY GUARD FOR MOWER	001/0 01A/0 01A/1 01A/2
590.47450	MOTOR GUARD AUTOSTART	001/0 001/1 001/2 001/3
		001/4 001/5 01A/0 01A/1
		01A/2 01A/3
590.47454	MOTOR GUARD B&S TWIN COMPL.	001/0 001/1 001/2 001/3
		001/4 01A/0 01A/1 01A/2

AGROSAL d.o.o.

codice	denominazione	tavola
590.47463	ENGINE PROTECTION	001/3 001/4 001/5 01A/1
		01A/2 01A/3
590.47608	WIDE STAND. HANDLEBAR COMPL.	08B/0
590.47610	COMPL. STEERING COLUMN	07A/0 07A/1 07A/2 07A/3
590.47620	HANDLEBAR REL. LEVER COMPL.	07A/0 07A/1 07A/2 07A/3
590.47625	STEER.COL. LOCK LEVER COMPL.	07A/0 07A/1 07A/2 07A/3
590.47666	INVERT.POS.CONTR. LEVER COMP.	07A/0 07A/1 07A/2 07A/3
590.47688	STEER.COL.COUPL.W/MUFF.CH 15	07A/0 07A/1
590.47708	BATTERY SUPPORT	01A/0 01A/1 01A/2
590.47709	STOP SWITCH SUPPORT COMPL.	008/0 008/1 008/2 008/3
		008/4 08B/0 08B/1 08B/2
		08B/3 08C/0 08C/1
590.47743	HUB COVER LONG	011/1 011/2 011/3 011/4
590.47745	HUB COVER COMPL. SHORT	011/1 011/2 011/3 011/4
590.47858	STEERING CLUTCH HOUSING C.	05A/0
590.47865	STEERING CLUTCH LEVER	05B/0
590.47871	STEERING CLUTCH CENT. SHAFT C.	05A/0
590.47927	MOTOR GUARD A 220	001/0 001/1 001/2 001/3
		001/4 001/5
590.48042	BATTERY SUPPORT COMPL.	01A/0 01A/1 01A/2
590.48102	LONG CLUTCH RING	02A/0
590.48122	BATTERY SUPPORT	01A/0 01A/1 01A/2
590.48181	DIFFERENTIAL MF605 COMPL.	06A/0
590.48200	HALF-DISK LEVER COMPL.	010/0 010/1 010/2
590.48208	HALF-DISK PIN COMPL.	010/0 010/1 010/2
590.48469	DOUBLE LEVER COUPLING	010/0 010/1 010/2
590.48522	SUPPORT COMPL. SILENTBLOC	009/0 009/1
590.49810	CLUTCH BOTTOM PLATE	05B/0
590.51682	HANDLEBAR COLUMN	07B/0
590.56051	MOTOR GUARD 15LD315	001/0 001/1 001/2 001/3
		001/4 001/5 01A/3
590.56052	MOTOR GUARD 6LD AA	01A/0 01A/1 01A/2
590.56089	HONDA COVER ENGINE	001/5 01A/2 01A/3
590.56111	GUARD L100AE	01A/3
590.56258	CLUTCH FORK	01B/0
590.56365	PTO GEAR COMPL.	004/0 004/1 004/2 004/3
		004/4 04B/0
590.56373	DOUBLE GEAR	04B/0
590.56378	GEAR SHAFT COMPL.	04A/0 04A/1 04A/2
590.56383	TRIPLE GEAR	004/2 004/3 004/4
590.56385	TRIPLE GEAR COMPL.	004/0 004/1
590.56555	STEERING CLUTCH BELL	05D/0 05D/1 05D/2
590.56558	INTERNAL CONE	05C/0 05C/1 05C/2 05C/3
590.56573	WS LEVER LH COMPL	05D/0 05D/1 05D/2
590.56574	WS LEVER RH COMPL	05D/0 05D/1 05D/2
590.56583	PIN , LH	05D/0 05D/1 05D/2
590.56584	PIN , RH	05D/0 05D/1 05D/2 -
590.56900	HANDLEBAR SUPPORT COMPL.	09A/0
590.56905	OIL SUMP COMPL.	09A/0
590.56925	STEERING COLUMN MF COMPL.	007/0 007/1
590.56935	HANDLEBAR SELECT. LEVER COMPL.	007/0 007/1 007/2 007/3
590.56945	SUPPORT COMPL. (MF 600)	009/0 009/1
590.56960	SUPPORT F/STEERING COLUMN CPLT	07A/2
590.56969	STEERING COLUMN COUPLER	07A/2 07A/3
590.56970	STEERING COL. SUPPORT COMPL.	07A/0 07A/1
590.56972	COMPL. STEERING COLUMN SUPPORT	07A/3
590.56975	2-WH.TRACT.STEERING COL.SUPP.	009/2 009/3 009/4
590.56980	2-WH.TRACT.STEER.COL.W/SIL.BLO	007/2 007/3
590.56982	LOW BODYGUARD SUPPORT	001/3 001/4 001/5
590.56984	HIGH BODYGUARD SUPPORT	001/3 001/4
590.56986	610 BODYGUARD SUPPORT	001/3 001/4 001/5
590.56989	STEERING COLUMN SUPPORT	009/2 009/3 009/4
590.57075	HANDLEBAR MF COMPL.	008/1
590.57076	HANDLEBAR COMPL.MF 610	008/1 008/2 008/3 008/4
590.57077	MOTOR MOWER HANDLEBAR	008/2 008/3 008/4
590.57078	MOTOR MOWER WS HANDLEBAR	08A/1 08A/2
590.57081	MOTOR MOWER WS2 HANDLEBAR	08D/0
590.57082	MOTOR MOWER WS2 HANDLEBAR	08D/0
590.57090	MOTOR MOWER HANDLEBAR	008/0

codice	denominazione	tavola
590.57093	HANDLEBAR COMPL. MF 630 WS	08A/0
590.57100	COMPL. HANDLEBAR WS2	08D/1
590.57101	COMPL. HANDLEBAR WS2 DIESEL	08D/1
590.57110	HANDLEBAR WITH SILENTBLOC USA	08C/0 08C/1
590.57112	COMP.HANDLEBAR W/SILENTBLOCK	08C/0 08C/1
590.57115	UNIFIED WIDE HANDLEBAR	08B/1 08B/2 08B/3
590.57228	GEAR LEVER COMPL. MC710	09A/0
590.57240	INVERTER LEVER COMPL.	009/0 009/1 009/2 009/3
		009/4
590.57252	GEAR LEVER COMPL. FOR MF	009/0 009/1 009/2 009/3
		009/4
590.57270	GEAR STICK MF	009/1 009/2 009/3 009/4
590.57280	INVERTER LEVER COMPL. MF	07A/0
590.57300	GEAR LEVER COMPL. FOR M3740	07A/0 07A/1 07A/2 07A/3
590.57304	GEARBOX LEVER	09A/0
590.57308	GEAR LEVER COMPL.MF 610	009/1 009/2 009/3 009/4
590.57309	GEAR STICK MF 610	009/1 009/2 009/3 009/4
590.57315	REVERSER LEVER MOTOR MOWER	07A/1 07A/2 07A/3
590.57319	REVERSER LEVER 720/730	09A/0
590.57325	PTO STOP LEVER	09A/0
590.57527	TOP SUPPORT COMPL.	001/0 001/1
590.57530	TOP SUPPORT COMPL.	001/0 001/1
590.57533	LOWER SUPPORT COMPL.	001/0 001/1
590.57535	LOWER SUPPORT COMPL.	001/0 001/1
590.57561	STEER.COL. GUARD MF600 COMPL.	001/0 001/1 001/2
590.57566	TOP SUPPORT COMPL.MF610	001/1
590.57568	LOWER SUPPORT COMPL.MF610	001/1
590.57575	UPPER SUPPORT	001/2
590.57576	LOWER SUPPORT	001/2
590.57579	LOWER SUPPORT	001/2
590.57580	UPPER SUPPORT	001/2
590.57587	LOWER SUPPORT 610	001/2
590.57588	UPPER SUPPORT 610	001/2
590.57592	630WS PROTECTION	001/2 001/3 001/4 001/5
590.57604	BATTERY BOX	01B/0
590.57608	BATTERY BOX	01B/0
590.57800	GUARD END	05D/0
590.57804	PROTECTION COMPL.	05D/0
590.57819	COMPL. STIFFENING PLATE WS2	05C/1
590.57824	COMPL. STIFFENING PLATE WS2	05C/2
590.57831	COMPL.UPPER STIFFEN. PLATE S2	03B/0
590.59551	WHEEL COUPLING FLANGE	011/4
590.59561	CLAMPING SCREW	011/4
590.59571	WHEEL COUPLING FLANGE	011/4
592.47822	CLUTCH COMPL.F/WHEEL AXLE WS	05B/0
592.47884	CONE CLUTCH COMPL.	002/0 002/1 002/2 002/3
		002/4
592.47970	AUT.CLU.COM.B&S 11HP-VAN.12HP	002/0 002/1 002/2
592.47971	AUT.CONE CLUTCH COMP.2SPR.10CV	002/0 002/1 002/2 002/3
		002/4
592.48106	LONG CLUTCH ASSD	02A/0
592.48490	LH DIFFER. COMPL. Z-49	006/0
592.56252	CLUTCH D19 MOT.B&S5HPMC710	002/3
592.56253	CLUTCH D25,4 - 1 SPRING	002/2 002/3 002/4
592.56257	CLUTCH D25,4 - 2 SPRINGS	002/3 002/4
592.56265	COMPLETE CLUTCH D19, B&S ENG.	002/4
592.59555	"SUPER-BITE" WHEEL X 5.00-10"	011/4
592.59563	"SUPER-BITE" WHEEL X 4.00-10"	011/4
592.59567	"SUPER-BITE" WHEEL X 4.00-8"	011/4
592.59578	SUPER-BITE 5.0-10 FLANGE ASSY	011/4
592.59580	SUPER-BITE 4.0-10 FLANGE ASSY	011/4
922.43685	WHEEL SPACERS CM. 6 (PAIR)	011/0 011/1 011/2 011/3
		011/4
922.48923	WEIGHT 12 KG. FOR CUTTER BAR	011/0 011/1 011/2 011/3
922.57794	PLATE FOR TWINNING WHEELS	011/4

AGROSAL d.o.o.

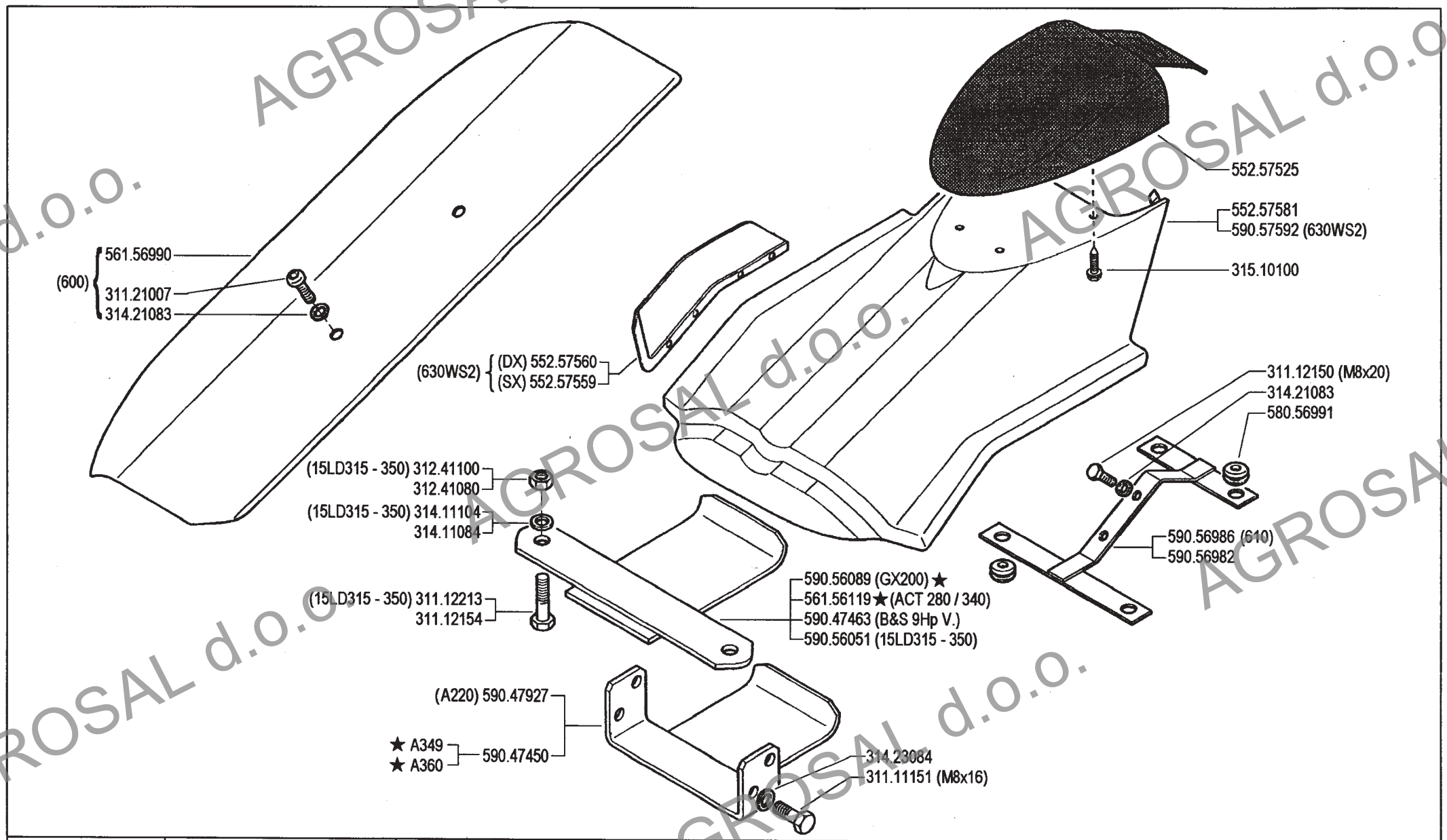

BCS	600 serie 94	**CARROZZERIA** **(600 - 610 - 620 - 630 - 630WS2)** BODY / CAROSSERIE CARROCERÍA / KAROSSERIE	DALLA MACCHINA DE LA MAQUINA DE LA MACHINE FROM THE MACHINE AB DER MASCHINE ★N.	AGGIORNAMENTO REVISION MISE A JOUR APLAZAMIENTO ANPASSUNG	01 10/2001	Rev. 5

AGROSAL d.o.o.

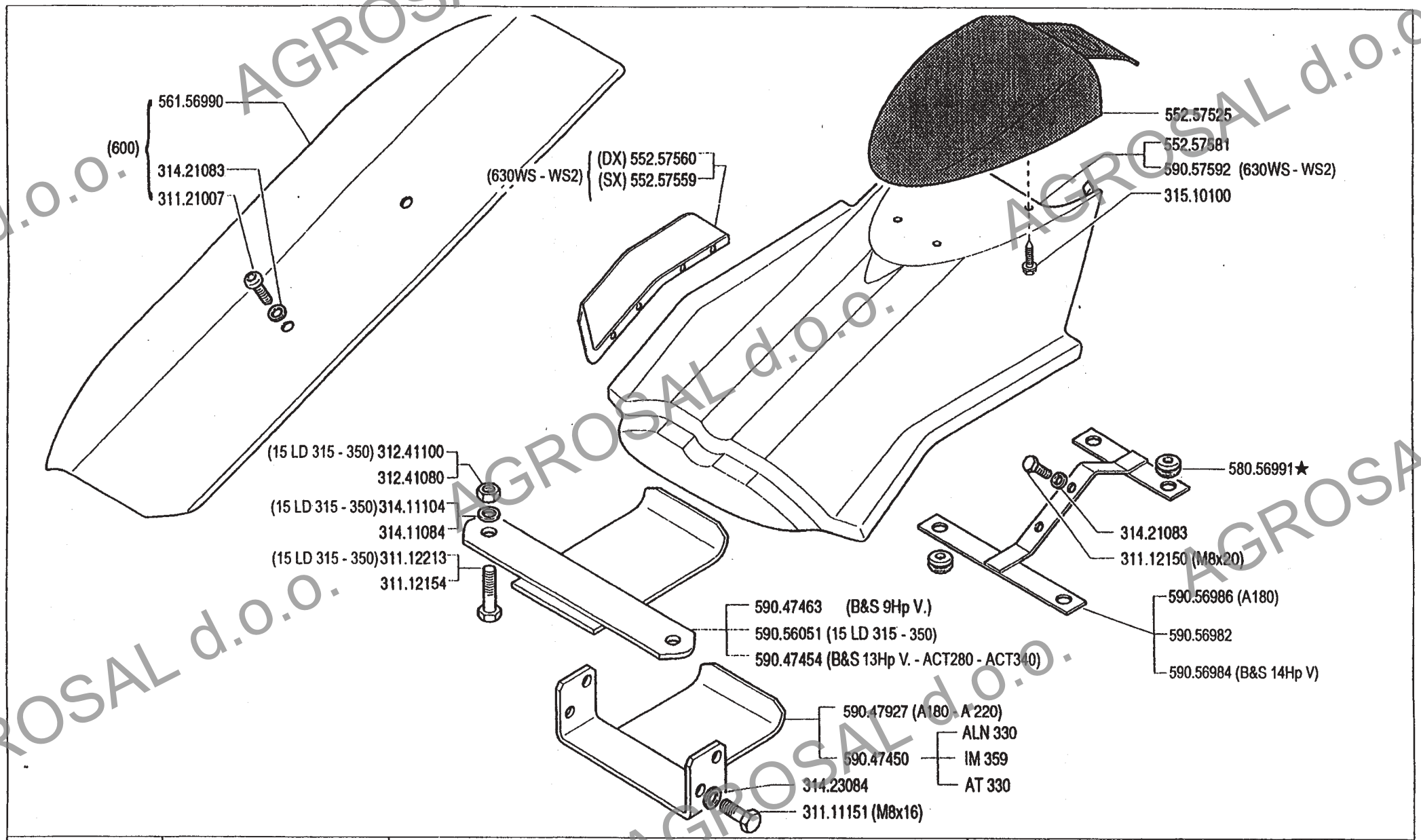

BCS	600 serie 94	**CARROZZERIA** **(600 - 610 - 620 - 630 - 630 WS - 630 WS2★)** BODY / CAROSSERIE CARROCERÍA / KAROSSERIE	DALLA MACCHINA DE LA MAQUINA DE LA MACHINE FROM THE MACHINE AB DER MASCHINE ★N.	AGGIORNAMENTO REVISION MISE A JOUR APLAZAMIENTO ANPASSUNG	01 7/1999	Mod. 04

AGROSAL d.o.o.

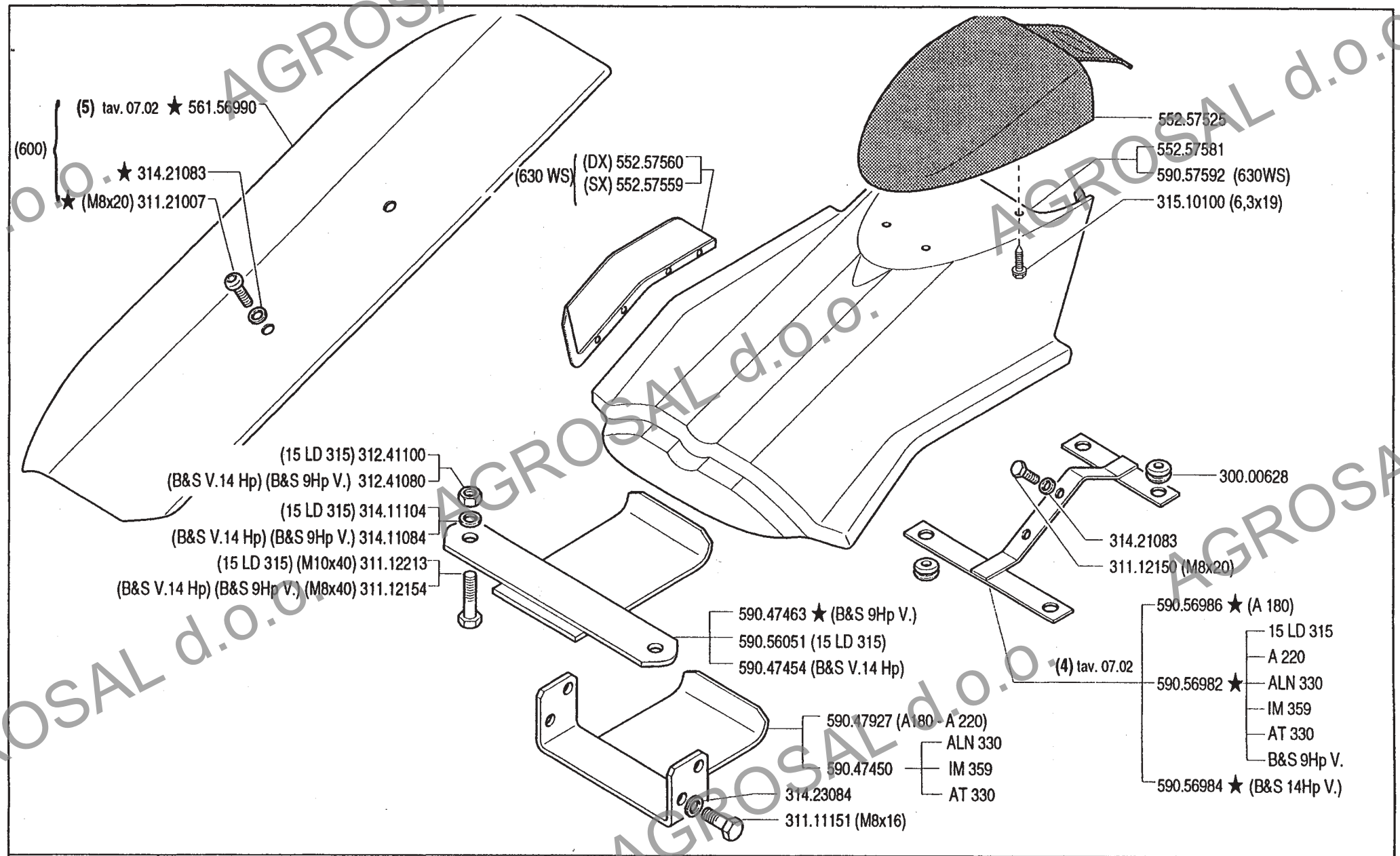

BCS 600 serie 94	**CARROZZERIA** (600-610-620-630-630 WS)	DALLA MACCHINA DE LA MAQUINA DE LA MACHINE FROM THE MACHINE AB DER MASCHINE	**11254** (630 WS)	**01.03**	
	CARROCERÍA / BODY		**22690** (630)		
			158833 (620)		
	CAROSSERIE / KAROSSERIE		**2801** (610)	4/1997	
		★ N.	**80952** (600)		

AGROSAL d.o.o.

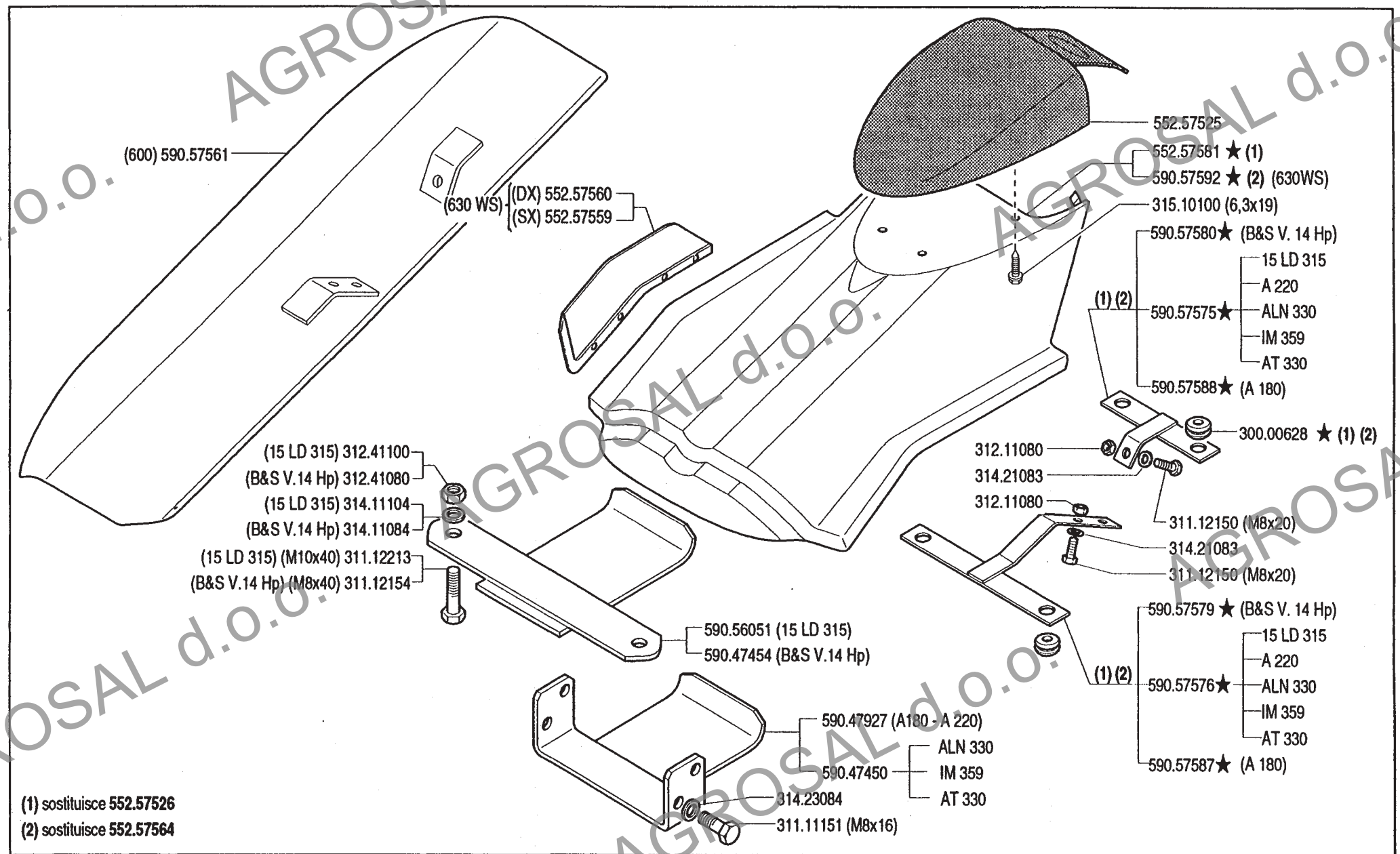

(1) sostituisce **552.57526**
(2) sostituisce **552.57564**

BCS 600 serie 94	**CARROZZERIA** (600-610-620-630-630 WS)		DALLA MACCHINA DE LA MAQUINA DE LA MACHINE FROM THE MACHINE AB DER MASCHINE		01.02
	CARROCERIA	BODY		**10803** (630 WS)	
				21832 (630)	
	CAROSSERIE	KAROSSERIE		**156155** (620)	8/1996
			★ N.	**1997** (610)	

AGROSAL d.o.o.

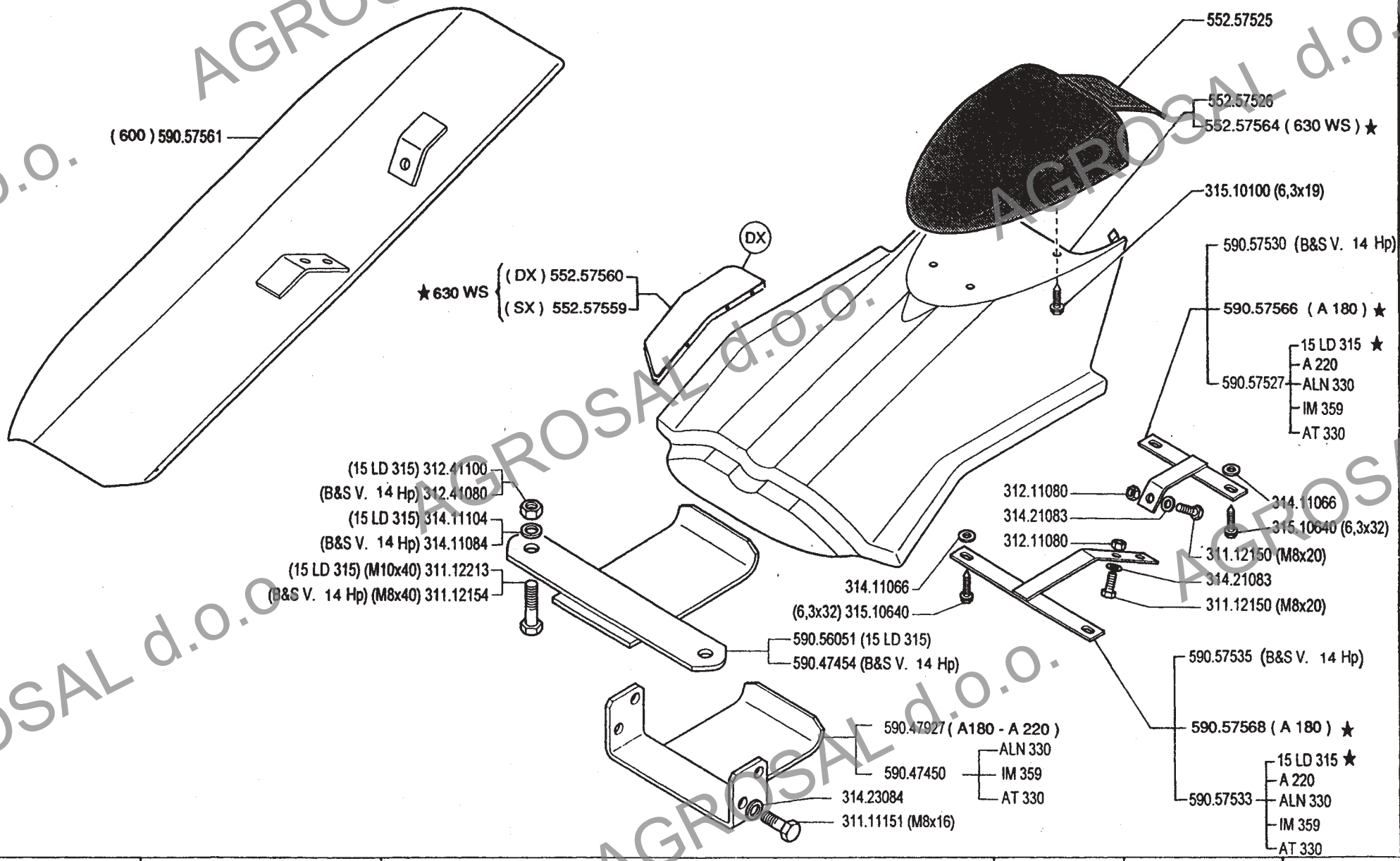

BCS	600 serie 94	CARROZZERIA (600 - 610 - 620 - 630 - 630 WS) CARROCERÍA BODY CAROSSERIE KAROSSERIE	DALLA MACCHINA DE LA MAQUINA DE LA MACHINE FROM THE MACHINE AB DER MASCHINE ★ N.	AGGIORNAMENTO REVISION MISE A JOUR APLAZAMIENTO ANPASSUNG	01.01 01.06.1995

AGROSAL d.o.o.

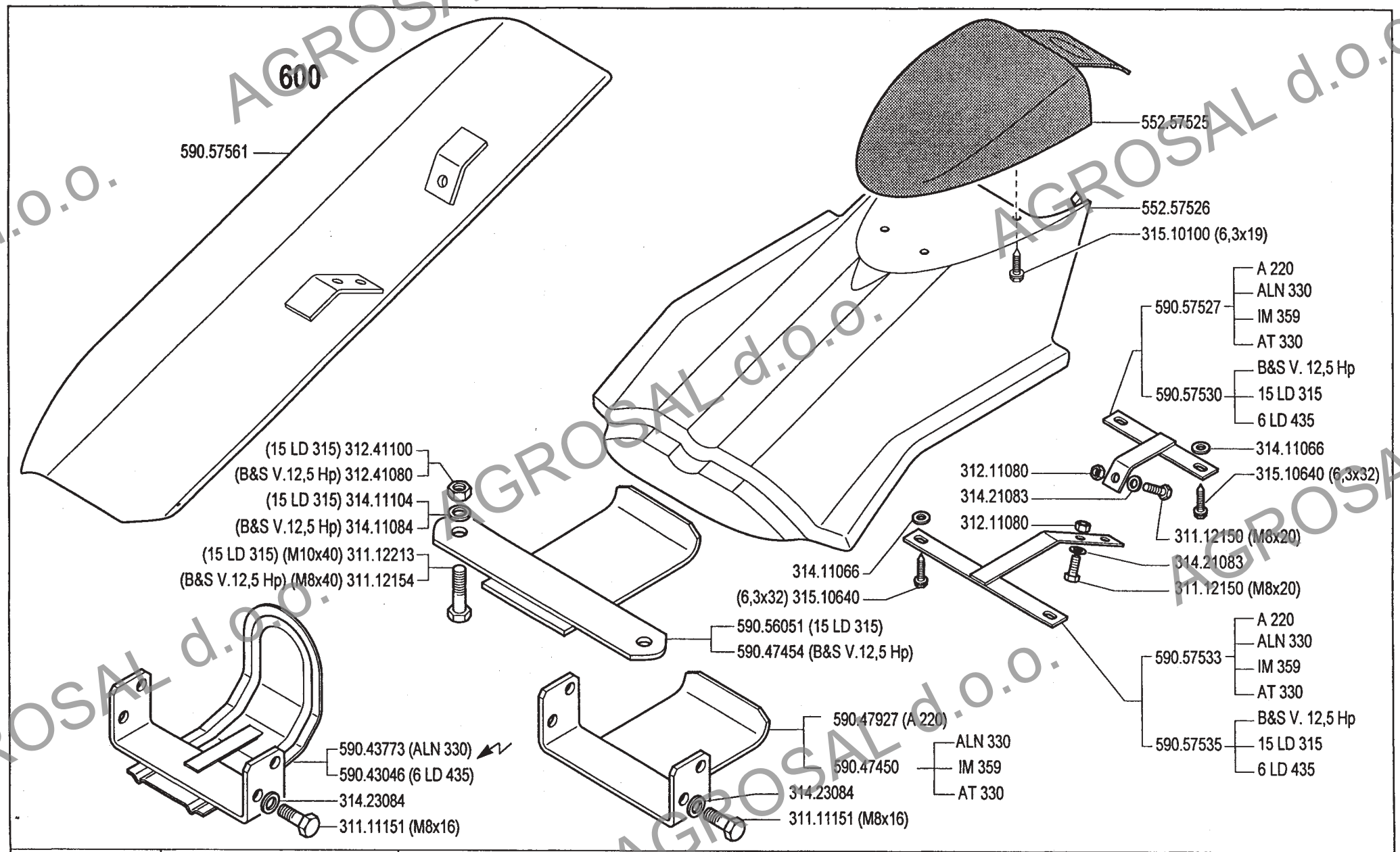

BCS	600 serie 94	CARROZZERIA CARROCERÍA / BODY CAROSSERIE / KAROSSERIE	DALLA MACCHINA DE LA MAQUINA DE LA MACHINE FROM THE MACHINE AB DER MASCHINE N.		01.00 02.05.1994

AGROSAL d.o.o.

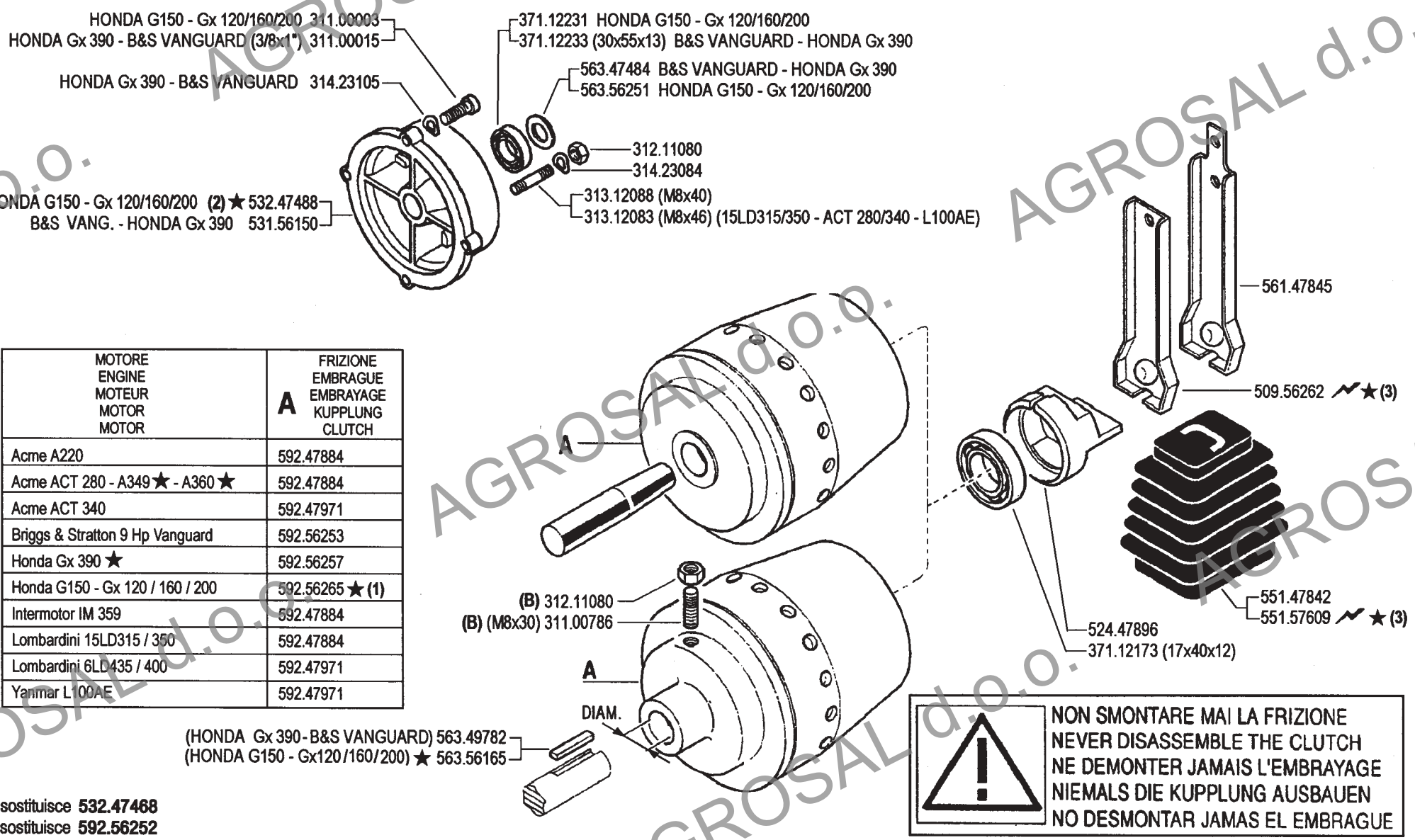

MOTORE ENGINE MOTEUR MOTOR MOTOR	A FRIZIONE EMBRAGUE EMBRAYAGE KUPPLUNG CLUTCH
Acme A220	592.47884
Acme ACT 280 - A349 ★ - A360 ★	592.47884
Acme ACT 340	592.47971
Briggs & Stratton 9 Hp Vanguard	592.56253
Honda Gx 390 ★	592.56257
Honda G150 - Gx 120 / 160 / 200	592.56265 ★ (1)
Intermotor IM 359	592.47884
Lombardini 15LD315 / 350	592.47884
Lombardini 6LD435 / 400	592.47971
Yanmar L100AE	592.47971

(2) sostituisce **532.47468**
(1) sostituisce **592.56252**

BCS

600 serie 94

FRIZIONE A CONO AUTOVENTILANTE

CLUTCH
EMBRAGUE

EMBRAYAGE
KUPPLUNG

DALLA MACCHINA
DE LA MAQUINA
DE LA MACHINE
FROM THE MACHINE
AB DER MASCHINE

★N.

(3)	5973 (650)
(1)	4194 (615)
(1)	166207 (620)

02

Rev. 4

12/2002

2ENNE

AGROSAL d.o.o.

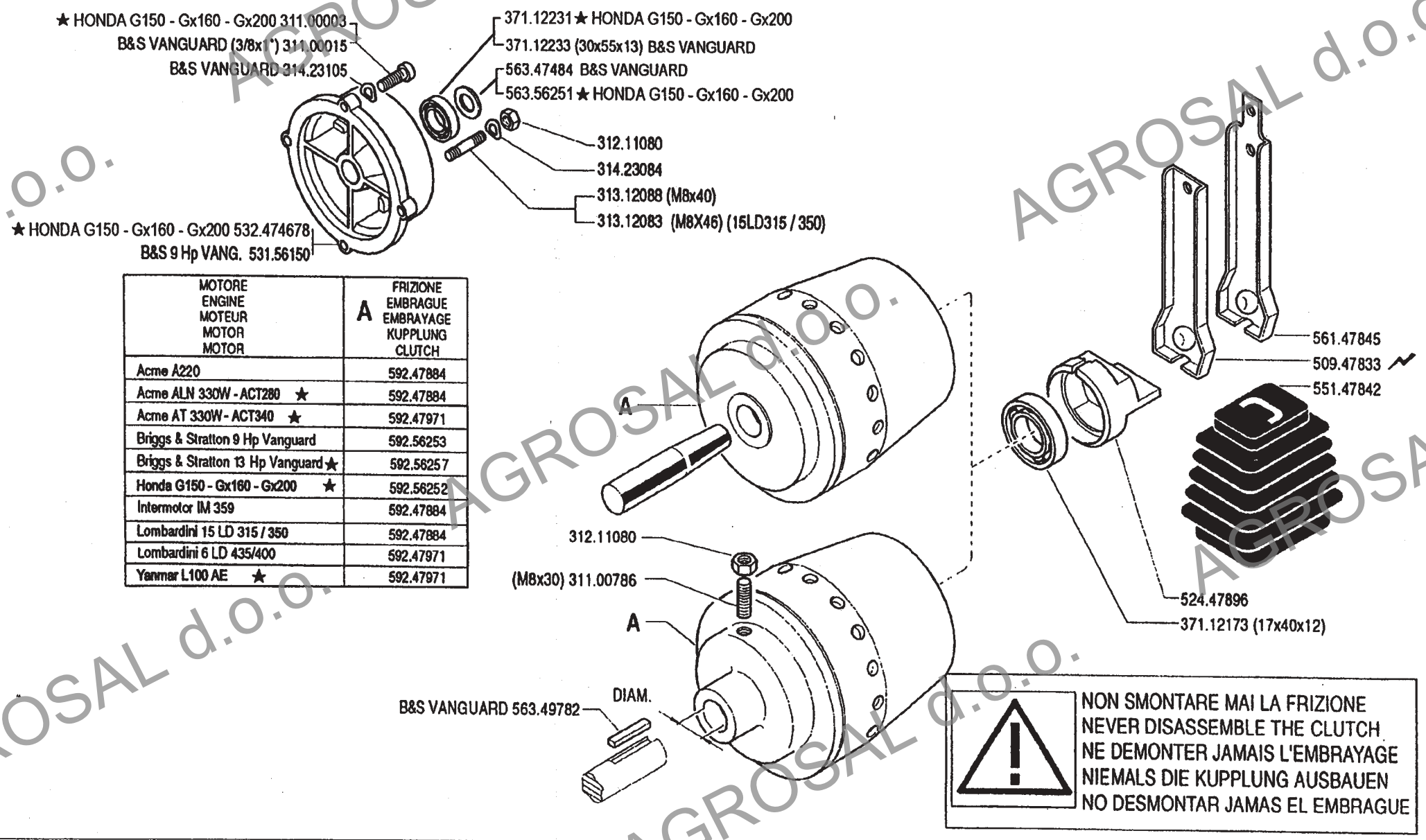

MOTORE ENGINE MOTEUR MOTOR MOTOR	A FRIZIONE EMBRAGUE EMBRAYAGE KUPPLUNG CLUTCH
Acme A220	592.47884
Acme ALN 330W - ACT280 ★	592.47884
Acme AT 330W - ACT340 ★	592.47971
Briggs & Stratton 9 Hp Vanguard	592.56253
Briggs & Stratton 13 Hp Vanguard ★	592.56257
Honda G150 - Gx160 - Gx200 ★	592.56252
Intermotor IM 359	592.47884
Lombardini 15 LD 315 / 350	592.47884
Lombardini 6 LD 435/400	592.47971
Yanmar L100 AE ★	592.47971

BCS

600 serie 94

FRIZIONE A CONO AUTOVENTILANTE

CLUTCH
EMBRAGUE

EMBRAYAGE
KUPPLUNG

DALLA MACCHINA
DE LA MAQUINA
DE LA MACHINE
FROM THE MACHINE
AB DER MASCHINE

★N.

AGGIORNAMENTO	02	Mod. 03
REVISION		
MISE A JOUR		
APLAZAMIENTO	7/1999	
ANPASSUNG		

25NNE

AGROSAL d.o.o.

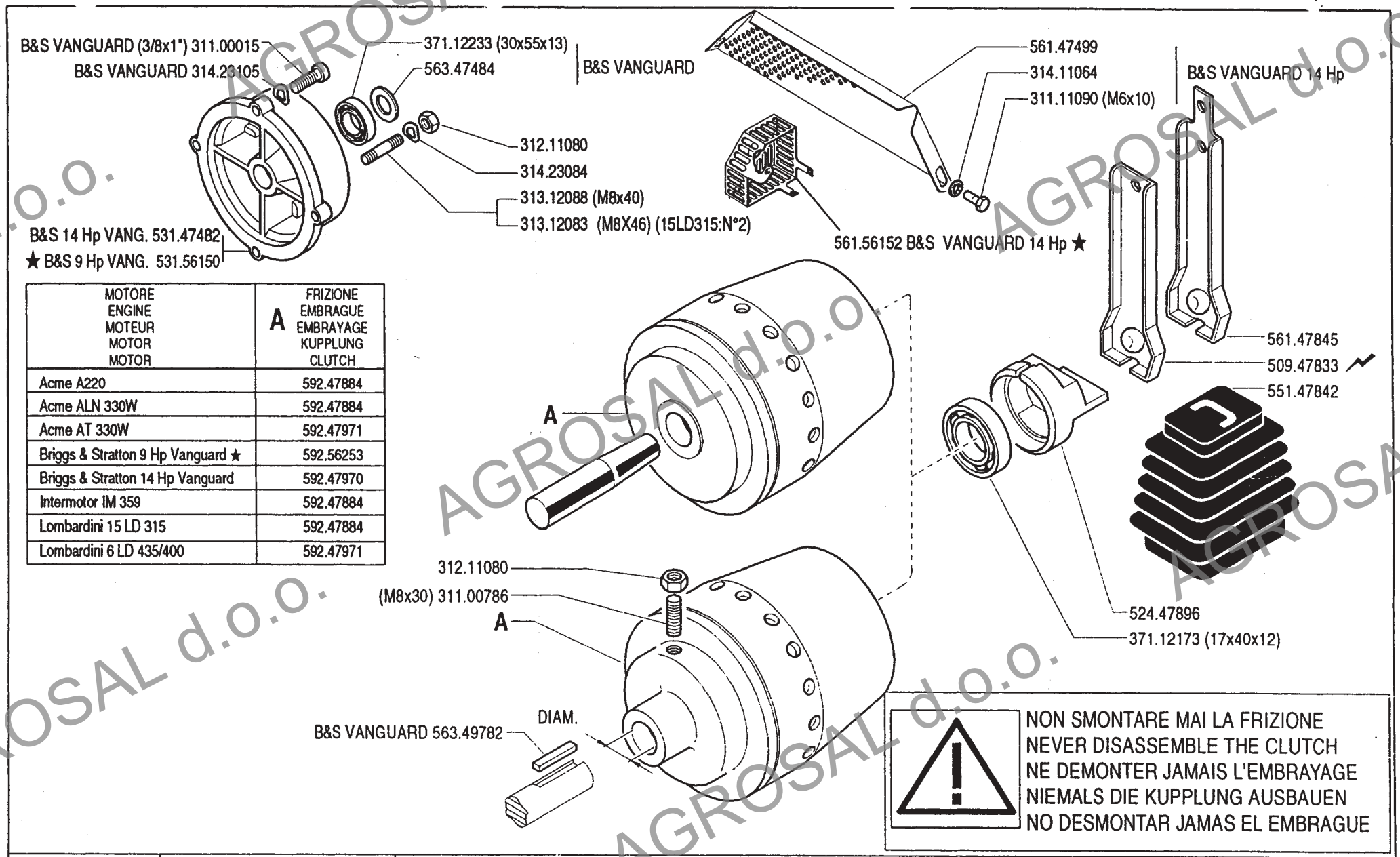

MOTORE ENGINE MOTEUR MOTOR MOTOR	A FRIZIONE EMBRAGUE EMBRAYAGE KUPPLUNG CLUTCH
Acme A220	592.47884
Acme ALN 330W	592.47884
Acme AT 330W	592.47971
Briggs & Stratton 9 Hp Vanguard ★	592.56253
Briggs & Stratton 14 Hp Vanguard	592.47970
Intermotor IM 359	592.47884
Lombardini 15 LD 315	592.47884
Lombardini 6 LD 435/400	592.47971

NON SMONTARE MAI LA FRIZIONE
NEVER DISASSEMBLE THE CLUTCH
NE DEMONTER JAMAIS L'EMBRAYAGE
NIEMALS DIE KUPPLUNG AUSBAUEN
NO DESMONTAR JAMAS EL EMBRAGUE

BCS 600 serie 94

FRIZIONE A CONO AUTOVENTILANTE

EMBRAGUE — CLUTCH
EMBRAYAGE — KUPPLUNG

DALLA MACCHINA
DE LA MAQUINA
DE LA MACHINE
FROM THE MACHINE
AB DER MASCHINE

★ N.

AGGIORNAMENTO	02.02
REVISION	
MISE A JOUR	
APLAZAMIENTO	9/1997
ANPASSUNG	

AGROSAL d.o.o.

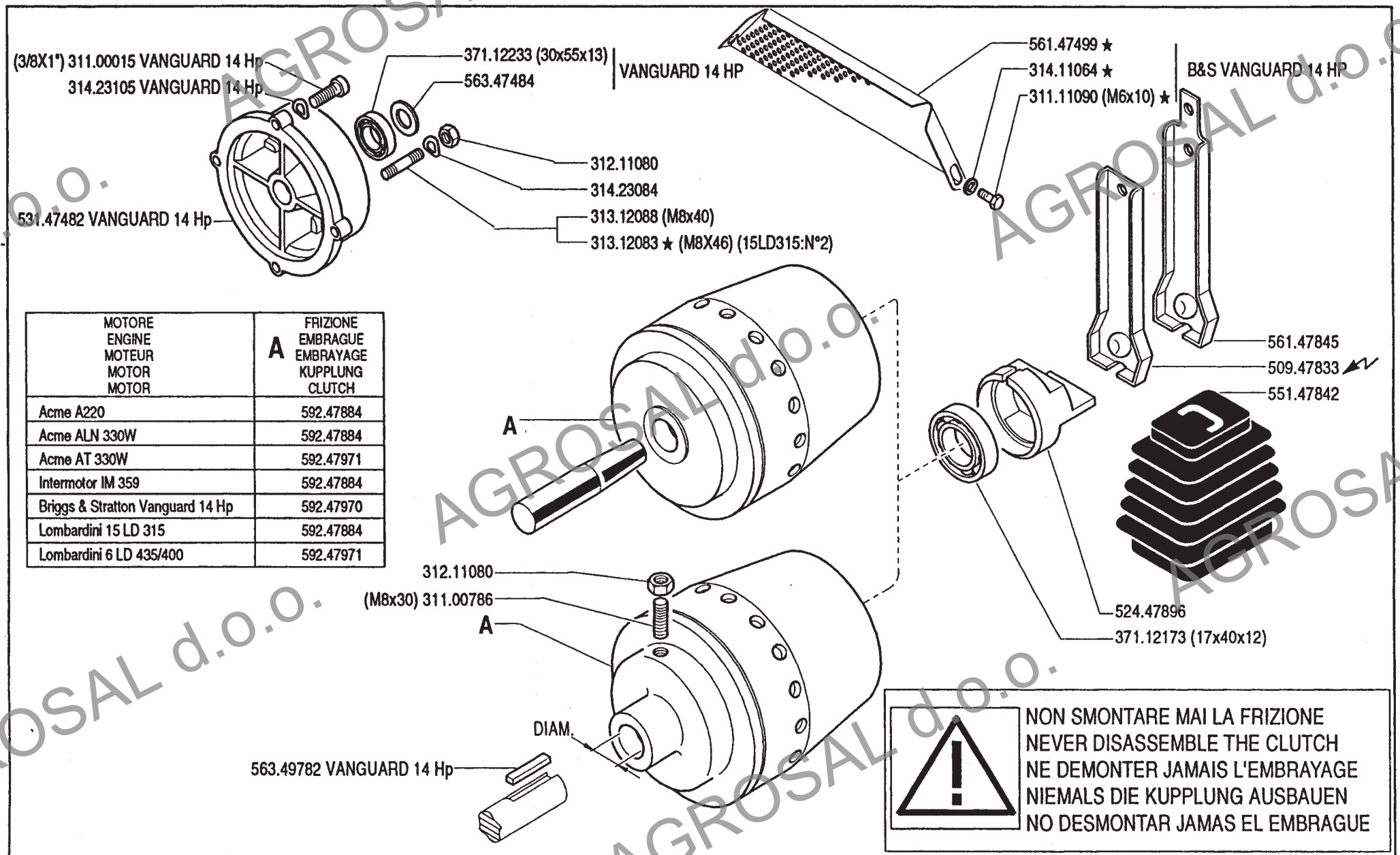

MOTORE ENGINE MOTEUR MOTOR MOTOR	A FRIZIONE EMBRAGUE EMBRAYAGE KUPPLUNG CLUTCH
Acme A220	592.47884
Acme ALN 330W	592.47884
Acme AT 330W	592.47971
Intermotor IM 359	592.47884
Briggs & Stratton Vanguard 14 Hp	592.47970
Lombardini 15 LD 315	592.47884
Lombardini 6 LD 435/400	592.47971

NON SMONTARE MAI LA FRIZIONE
NEVER DISASSEMBLE THE CLUTCH
NE DEMONTER JAMAIS L'EMBRAYAGE
NIEMALS DIE KUPPLUNG AUSBAUEN
NO DESMONTAR JAMAS EL EMBRAGUE

BCS	600 serie 94	FRIZIONE A CONO AUTOVENTILANTE EMBRAGUE / CLUTCH EMBRAYAGE / KUPPLUNG	DALLA MACCHINA DE LA MAQUINA DE LA MACHINE FROM THE MACHINE AB DER MASCHINE ★ N.	AGGIORNAMENTO REVISION MISE A JOUR APLAZAMIENTO ANPASSUNG	02.01 01.06.1995

AGROSAL d.o.o.

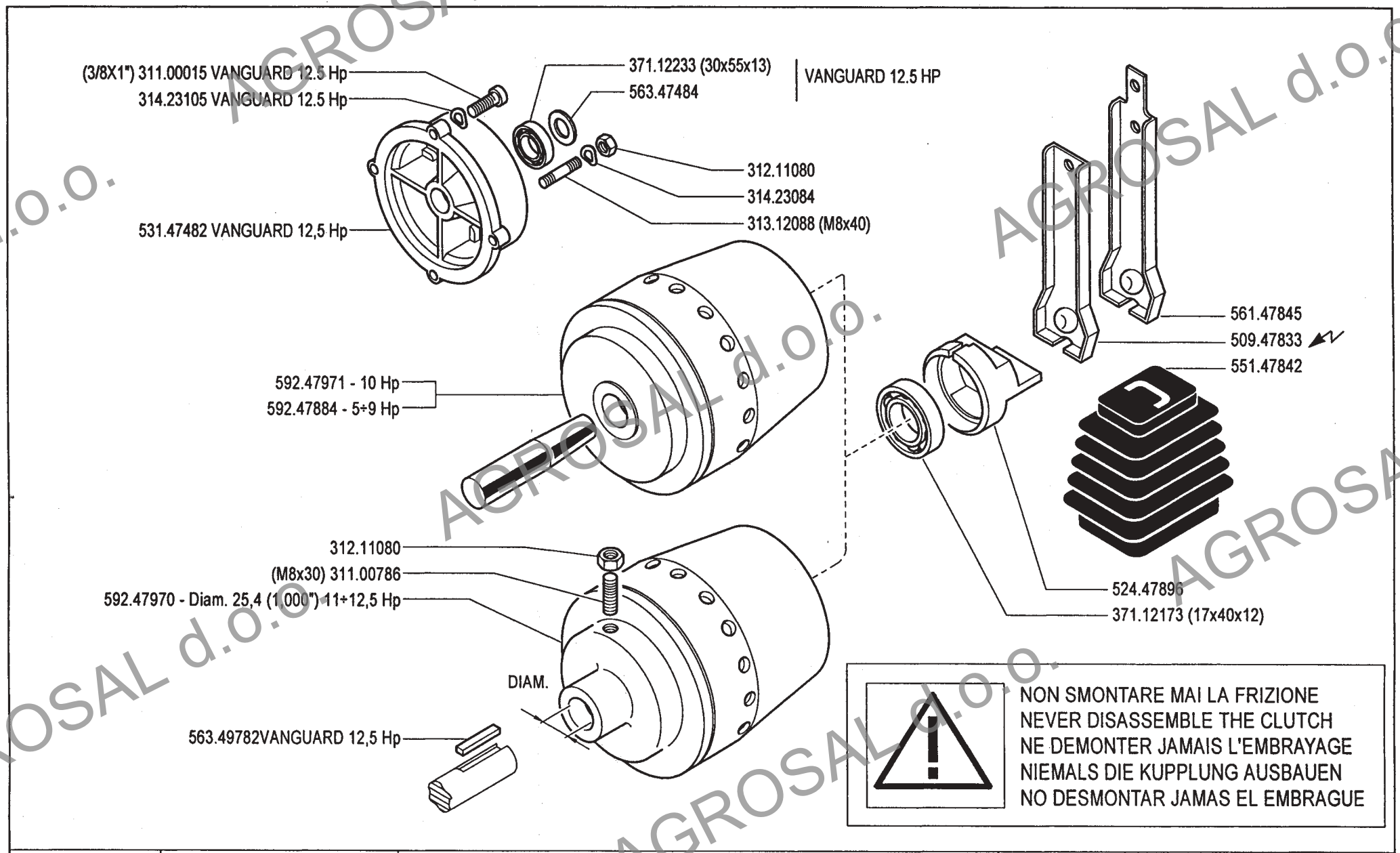

BCS	600 serie 94	FRIZIONE A CONO AUTOVENTILANTE EMBRAGUE / CLUTCH EMBRAYAGE / KUPPLUNG	DALLA MACCHINA DE LA MAQUINA DE LA MACHINE FROM THE MACHINE AB DER MASCHINE N.		02.00 02.05.1994

AGROSAL d.o.o.

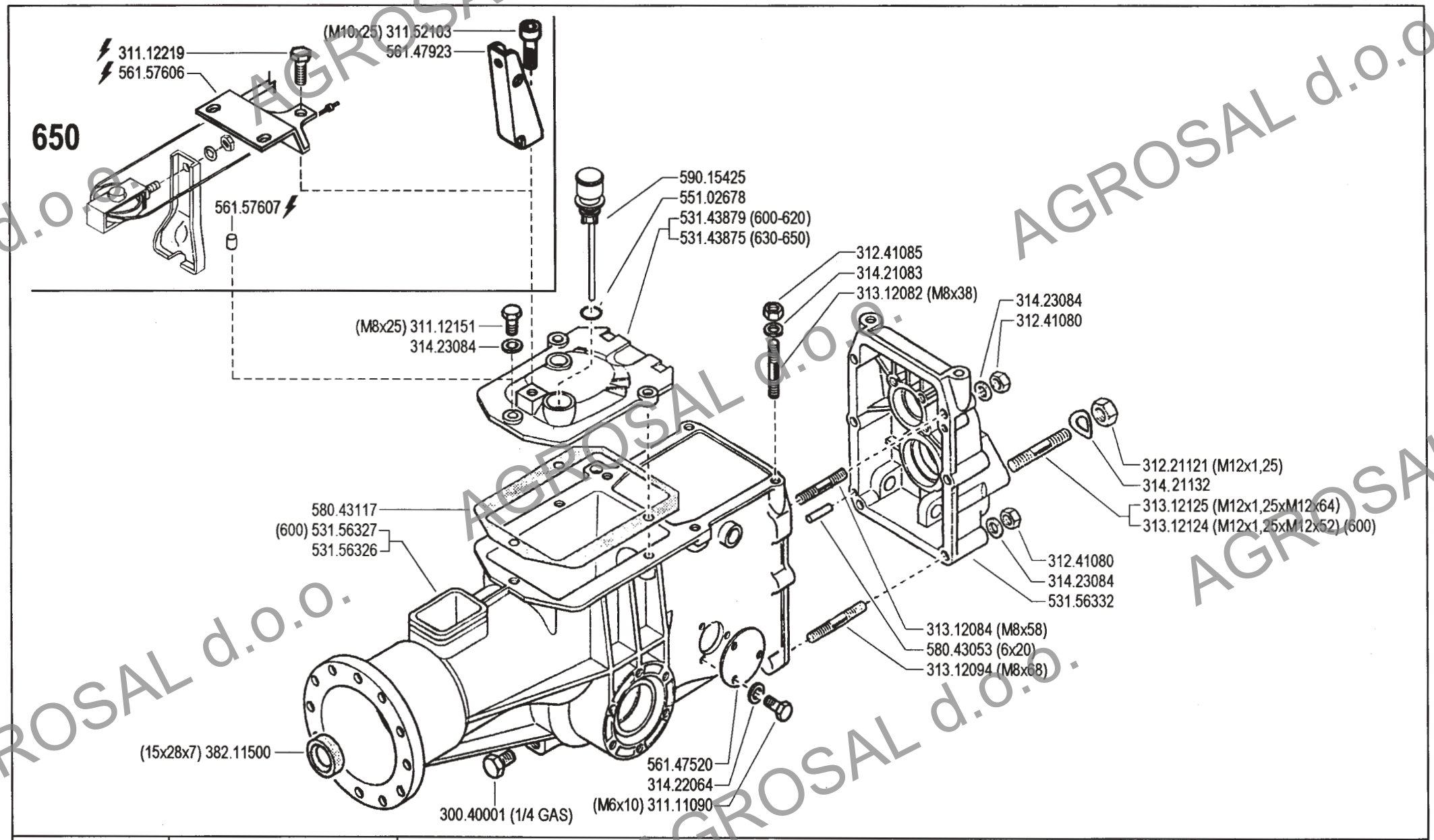

BCS	600 serie 94	SCATOLA CAMBIO (600 - 620 - 630 - 650)★ GEARBOX CAJA DE CAMBIO BOITE DE VITESSES WECHSELGETRIEBE	DALLA MACCHINA DE LA MAQUINA DE LA MACHINE FROM THE MACHINE AB DER MASCHINE ★N.	AGGIORNAMENTO REVISION MISE A JOUR APLAZAMIENTO ANPASSUNG	03 1/2004	Rev. 3

AGROSAL d.o.o.

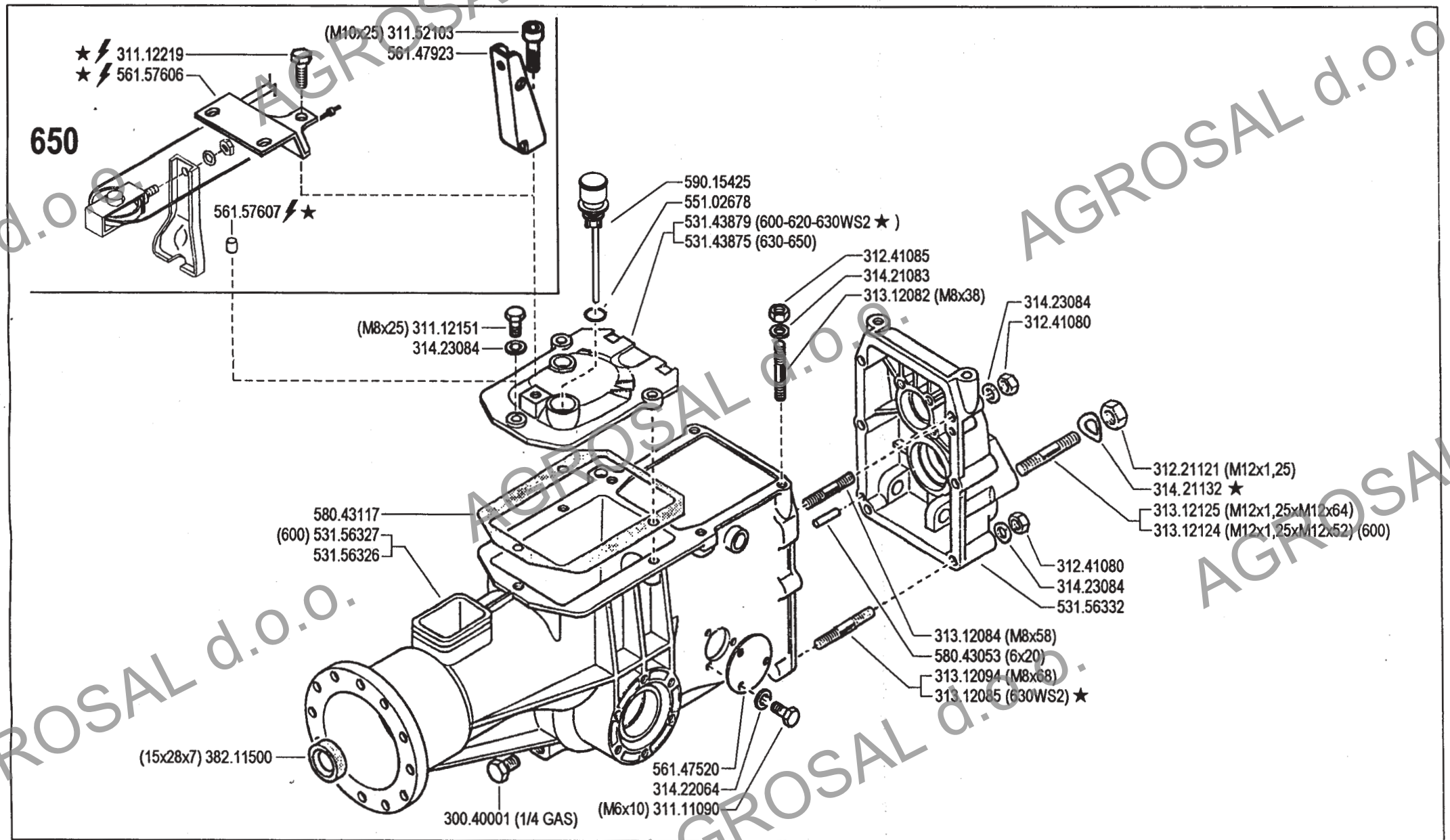

BCS	600 serie 94	**SCATOLA CAMBIO (600 - 620 - 630 - 630WS2★ - 650)** GEARBOX — BOITE DE VITESSES CAJA DE CAMBIO — WECHSELGETRIEBE	DALLA MACCHINA DE LA MAQUINA DE LA MACHINE FROM THE MACHINE AB DER MASCHINE ★N.	5973 (650)	03 — Rev. 2 12/2002

AGROSAL d.o.o.

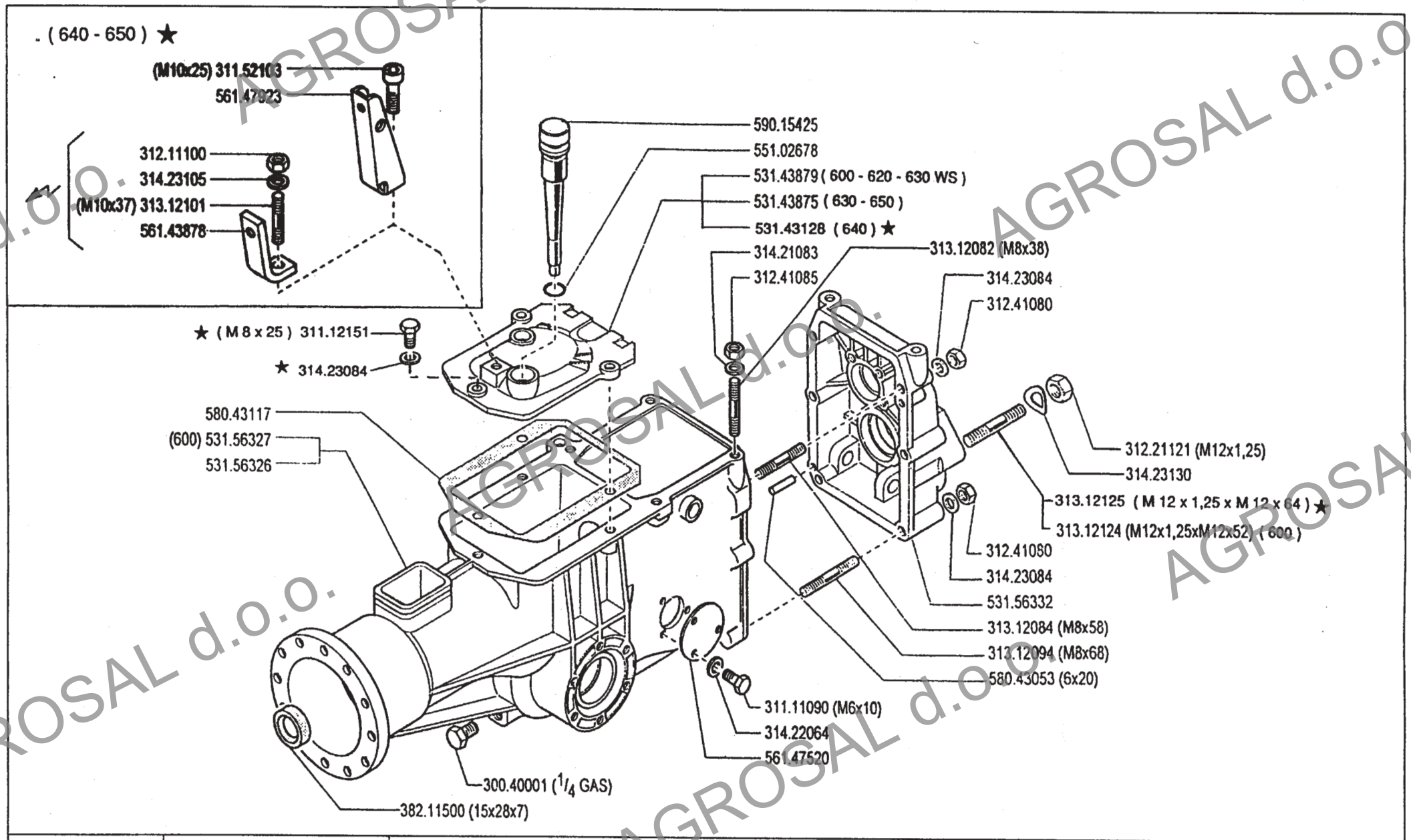

BCS	600 serie 94	**SCATOLA CAMBIO (600-620-630-630WS-640-650)** GEARBOX / BOITE DE VITESSES CAJA DE CAMBIO / WECHSELGETRIEBE	DALLA MACCHINA DE LA MAQUINA DE LA MACHINE FROM THE MACHINE AB DER MASCHINE ★N.	AGGIORNAMENTO REVISION MISE A JOUR APLAZAMIENTO ANPASSUNG	03 6/1995	Mod. 01

AGROSAL d.o.o.

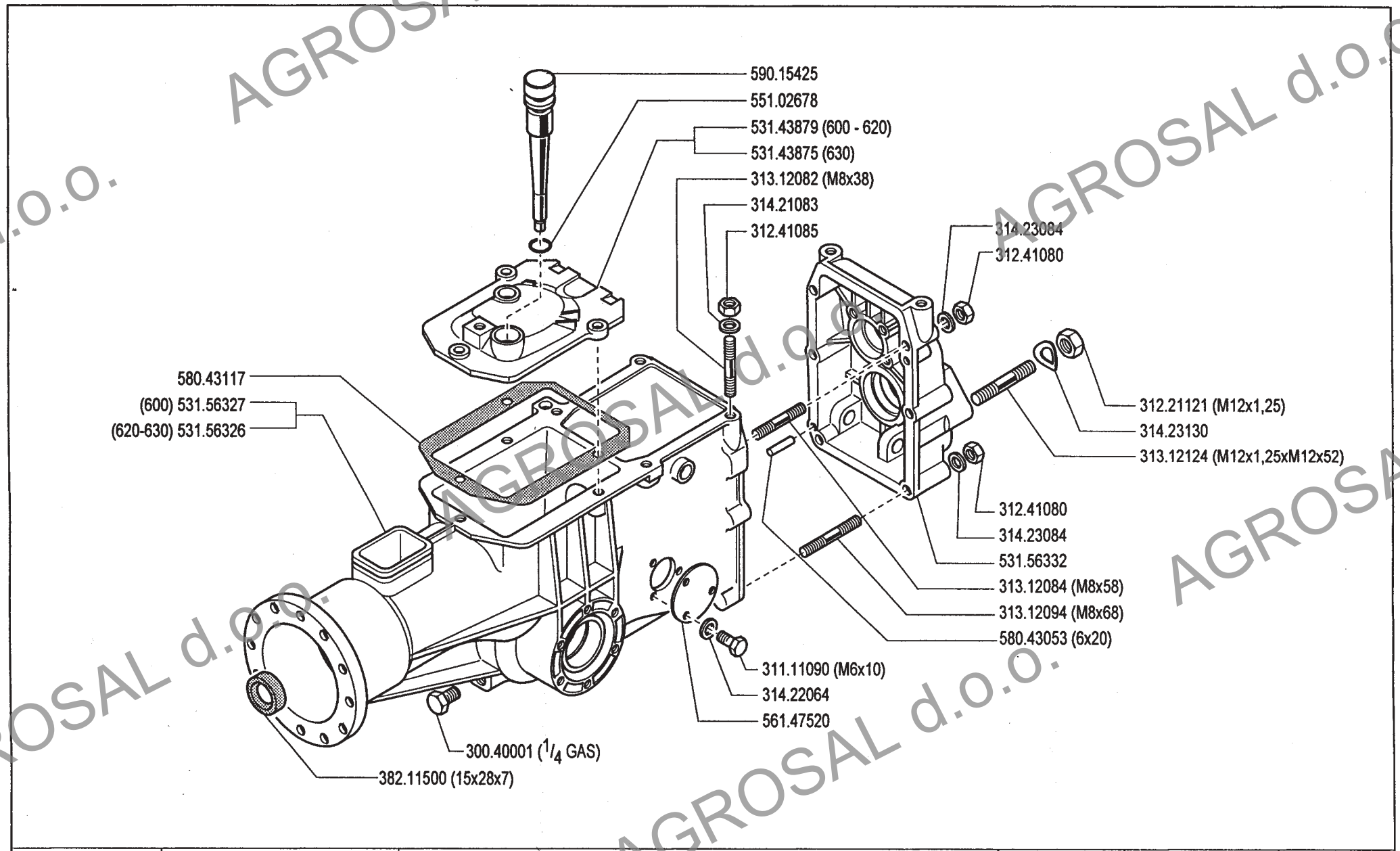

BCS 600 serie 94	SCATOLA CAMBIO CAJA DE CAMBIO — GEARBOX BOITE DE VITESSES — WECHSELGETRIEBE	DALLA MACCHINA DE LA MAQUINA DE LA MACHINE FROM THE MACHINE AB DER MASCHINE N.		03.00 02.05.1994

AGROSAL d.o.o.

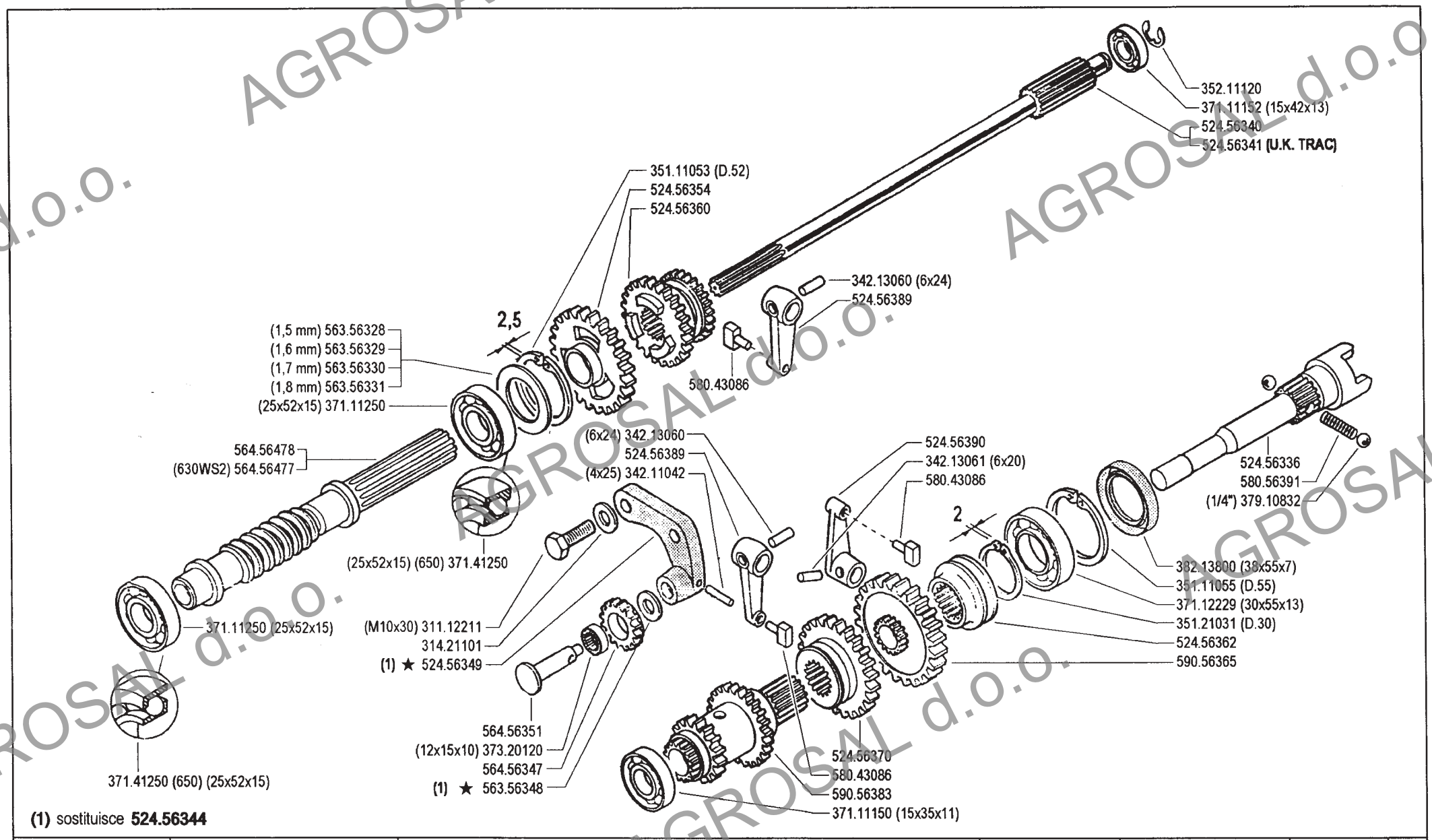

(1) sostituisce **524.56344**

BCS	600 serie 94	**INGRANAGGI CAMBIO** **(600 - 620 - 630 - 630WS2 - 650)** GEARS / ENGRANAGES ENGRANAJES / ZAHNRÄDER	DALLA MACCHINA DE LA MAQUINA DE LA MACHINE FROM THE MACHINE AB DER MASCHINE ★N.	AGGIORNAMENTO REVISION MISE A JOUR APLAZAMIENTO ANPASSUNG	**04**	Rev. 4
					9/2000	

AGROSAL d.o.o.

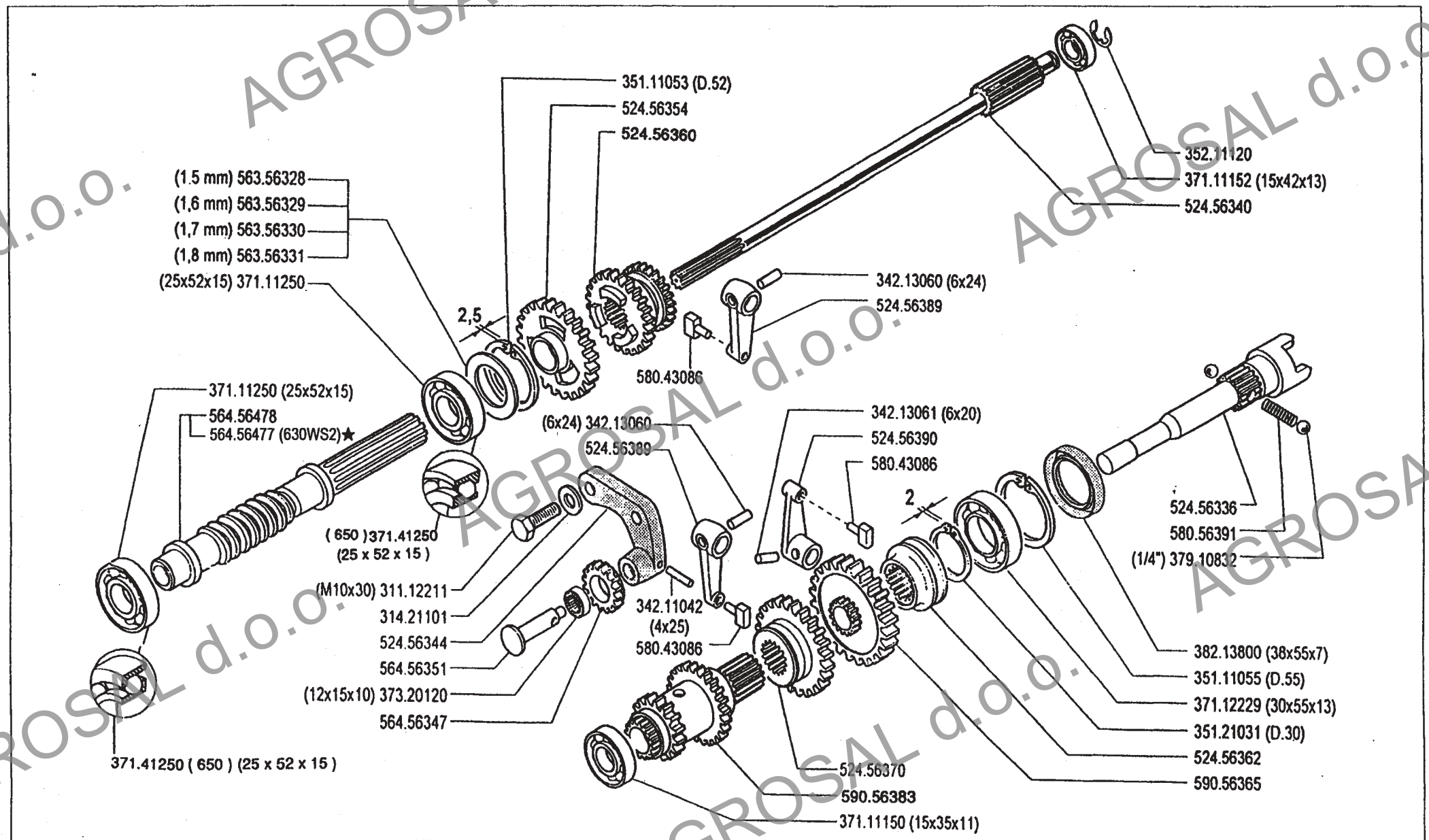

BCS	600 serie 94	**INGRANAGGI CAMBIO** **(600 - 620 - 630 - 630 WS - 630 WS2 - 650)** GEARS / ENGRANAGES ENGRANAJES / ZAHNRÄDER	DALLA MACCHINA DE LA MAQUINA DE LA MACHINE FROM THE MACHINE AB DER MASCHINE ★N.	AGGIORNAMENTO REVISION MISE A JOUR APLAZAMIENTO ANPASSUNG	04 7/1999	Mod. 03

AGROSAL d.o.o.

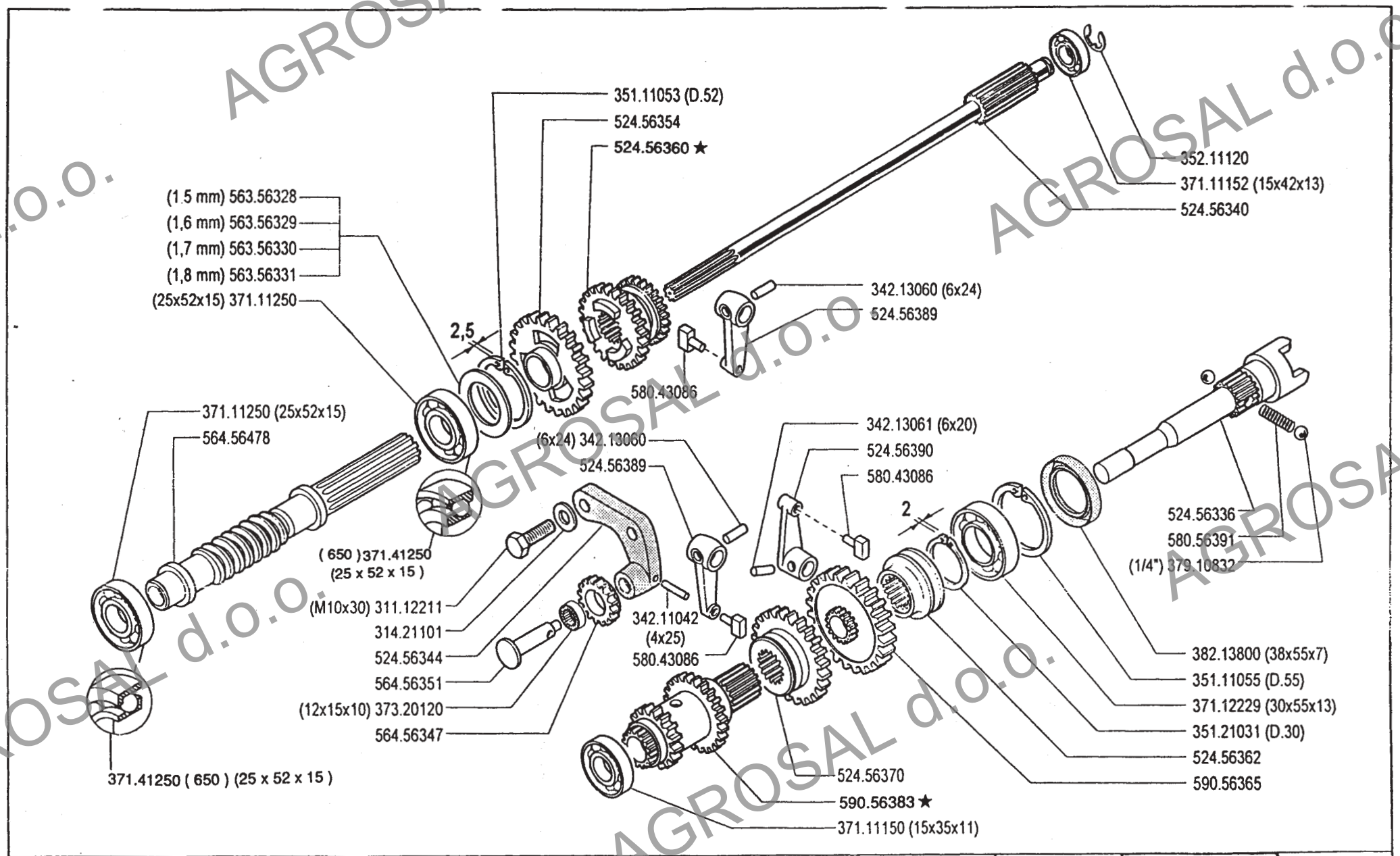

BCS	600 serie 94	INGRANAGGI CAMBIO (600 - 620 - 630 - 630 WS - 640 - 650) ENGRANAJES GEARS ENGRANAGES ZAHNRÄDER	DALLA MACCHINA DE LA MAQUINA DE LA MACHINE FROM THE MACHINE AB DER MASCHINE ★ N.	3267(650) 11036(640) 11036(630WS) 21882(630) 156431(620) 80754(600)	04.02 01.10.1996

AGROSAL d.o.o.

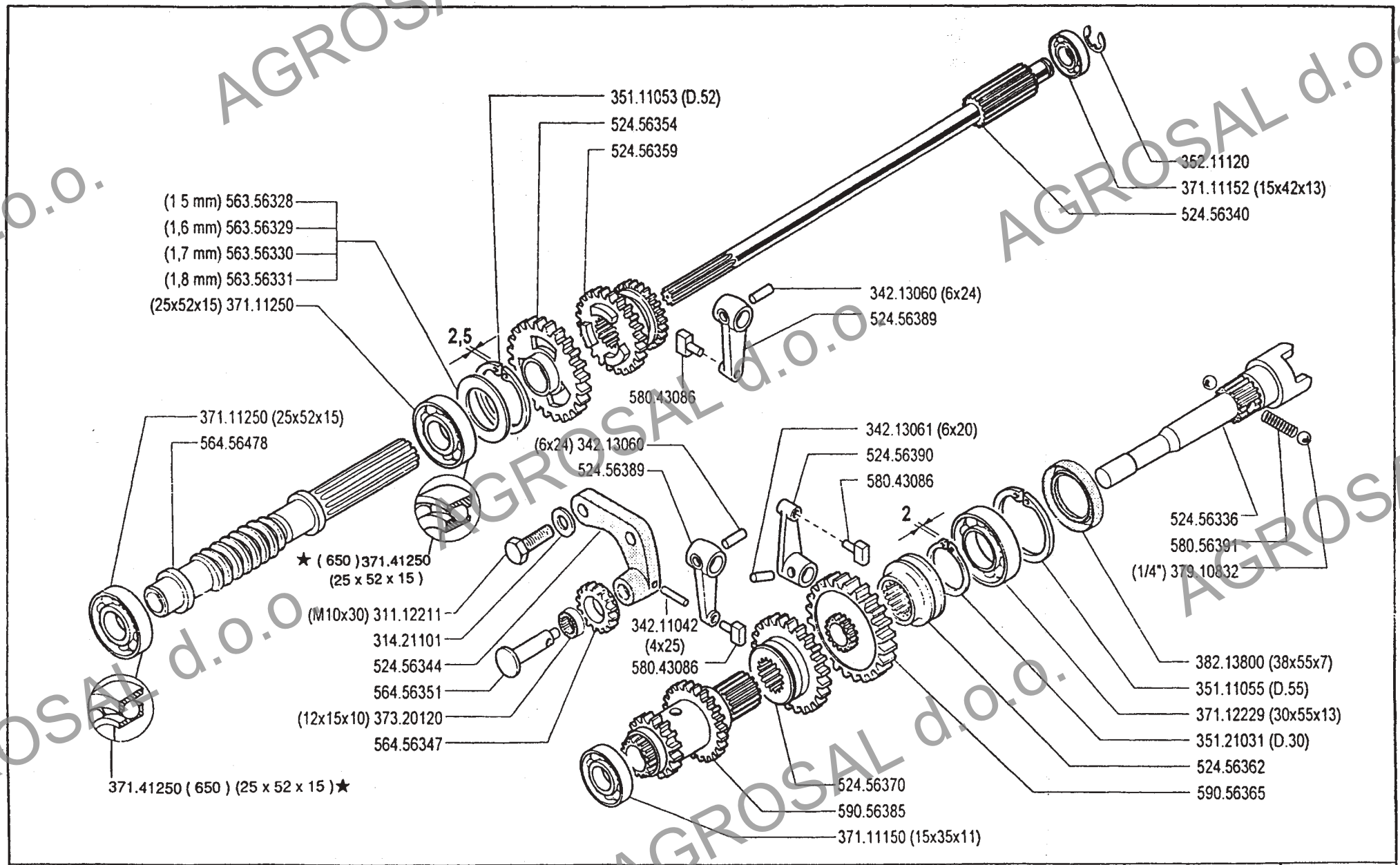

BCS	600 serie 94	INGRANAGGI CAMBIO (600 - 620 - 630 - 630 WS - 640 - 650) ENGRANAJES GEARS ENGRANAGES ZAHNRÄDER	DALLA MACCHINA DE LA MAQUINA DE LA MACHINE FROM THE MACHINE AB DER MASCHINE ★ N.	AGGIORNAMENTO REVISION MISE A JOUR APLAZAMIENTO ANPASSUNG	04 .01 01.06.1995

AGROSAL d.o.o.

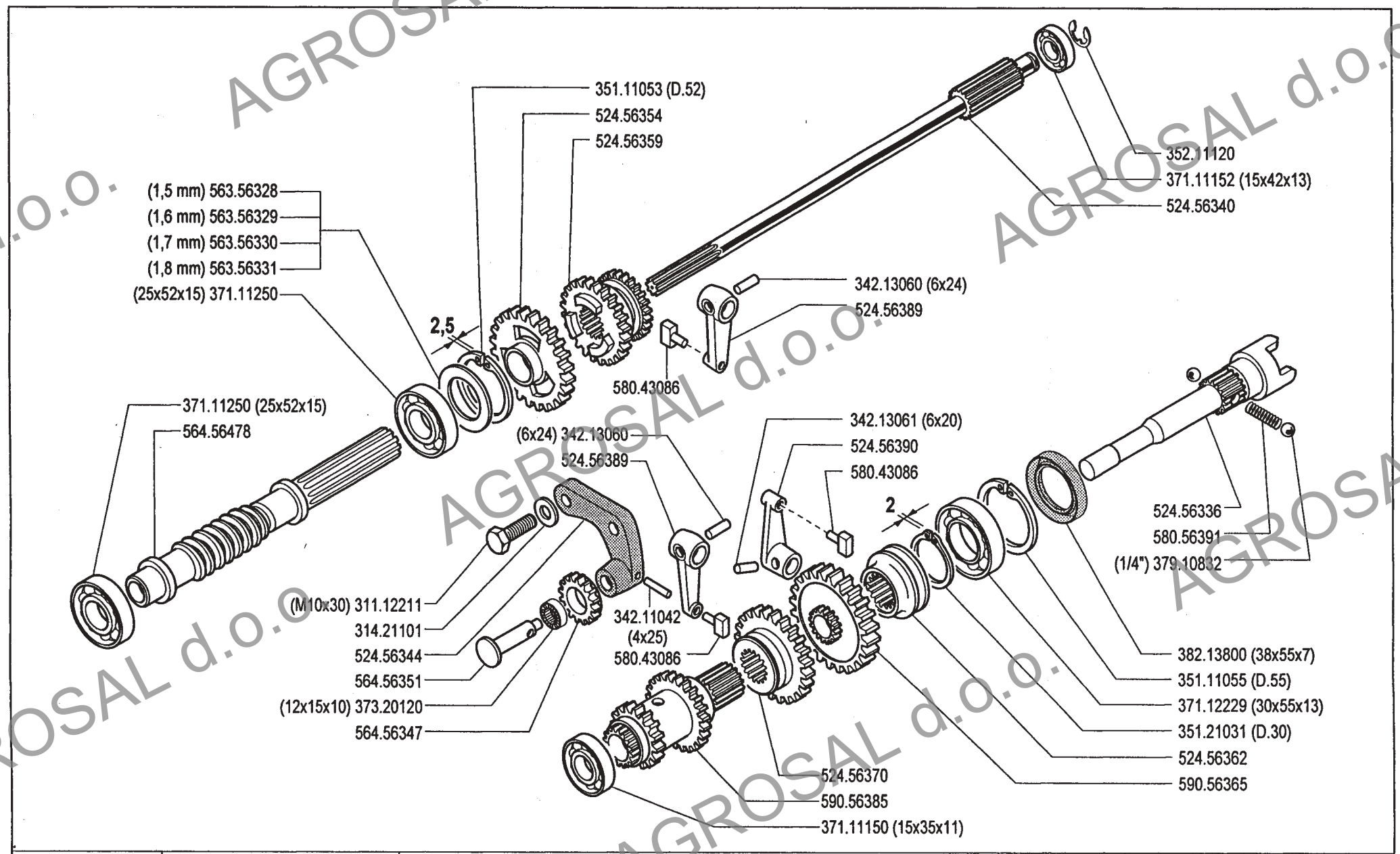

BCS 600 serie 94	INGRANAGGI CAMBIO ENGRANAJES / GEARS ENGRANAGES / ZAHNRÄDER	DALLA MACCHINA DE LA MAQUINA DE LA MACHINE FROM THE MACHINE AB DER MASCHINE N.		04.00 02.05.1994

AGROSAL d.o.o.

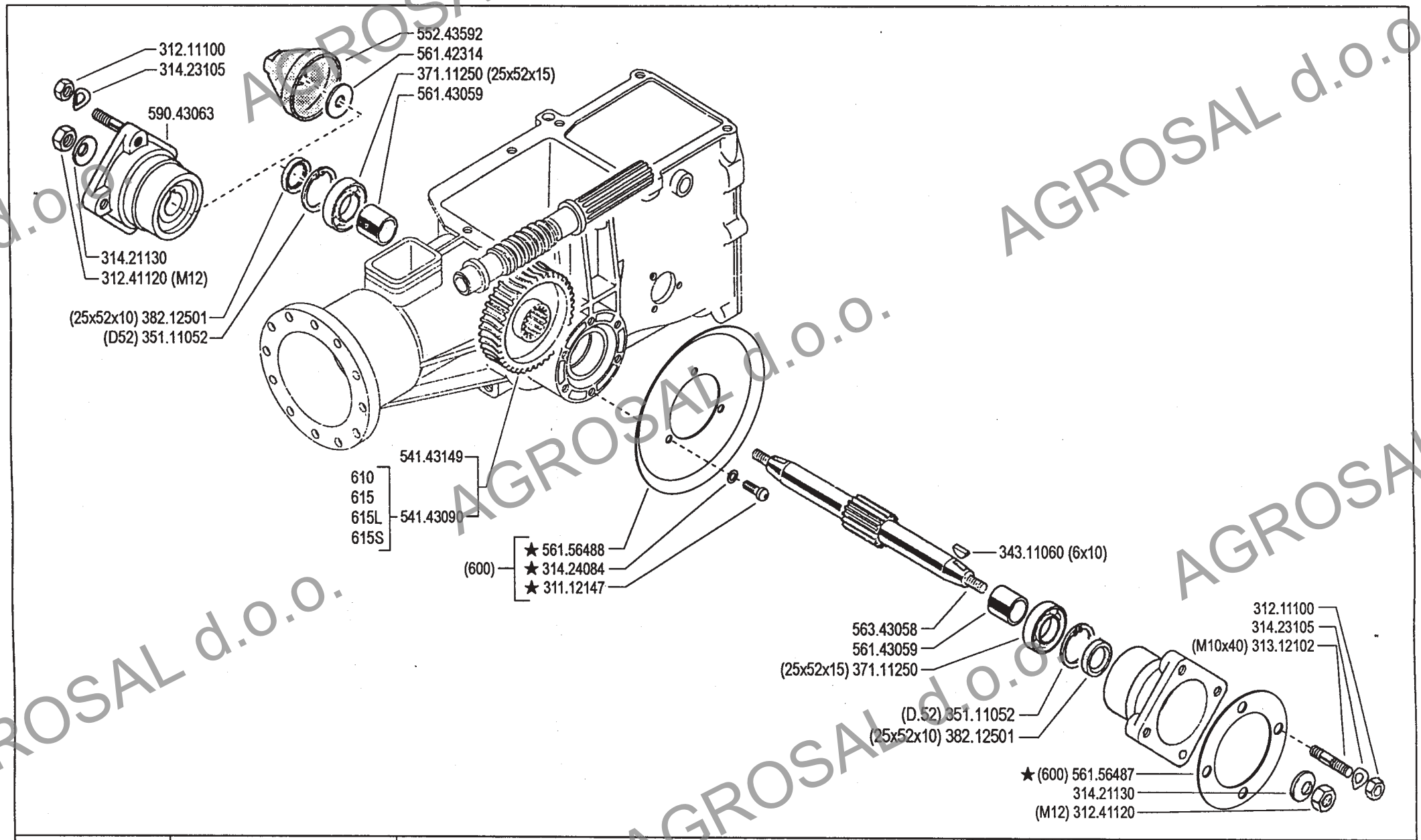

BCS	600 serie 94	**ASSE RUOTE (600 - 610 - 615 - 615L - 615S - 620)** WHEEL AXLE — ESSIEU ROUES EJE RUEDAS — RADACHSE	DALLA MACCHINA DE LA MAQUINA DE LA MACHINE FROM THE MACHINE AB DER MASCHINE ★N.	AGGIORNAMENTO REVISION MISE A JOUR APLAZAMIENTO ANPASSUNG	05 — Mod. 03 2/2000

AGROSAL d.o.o.

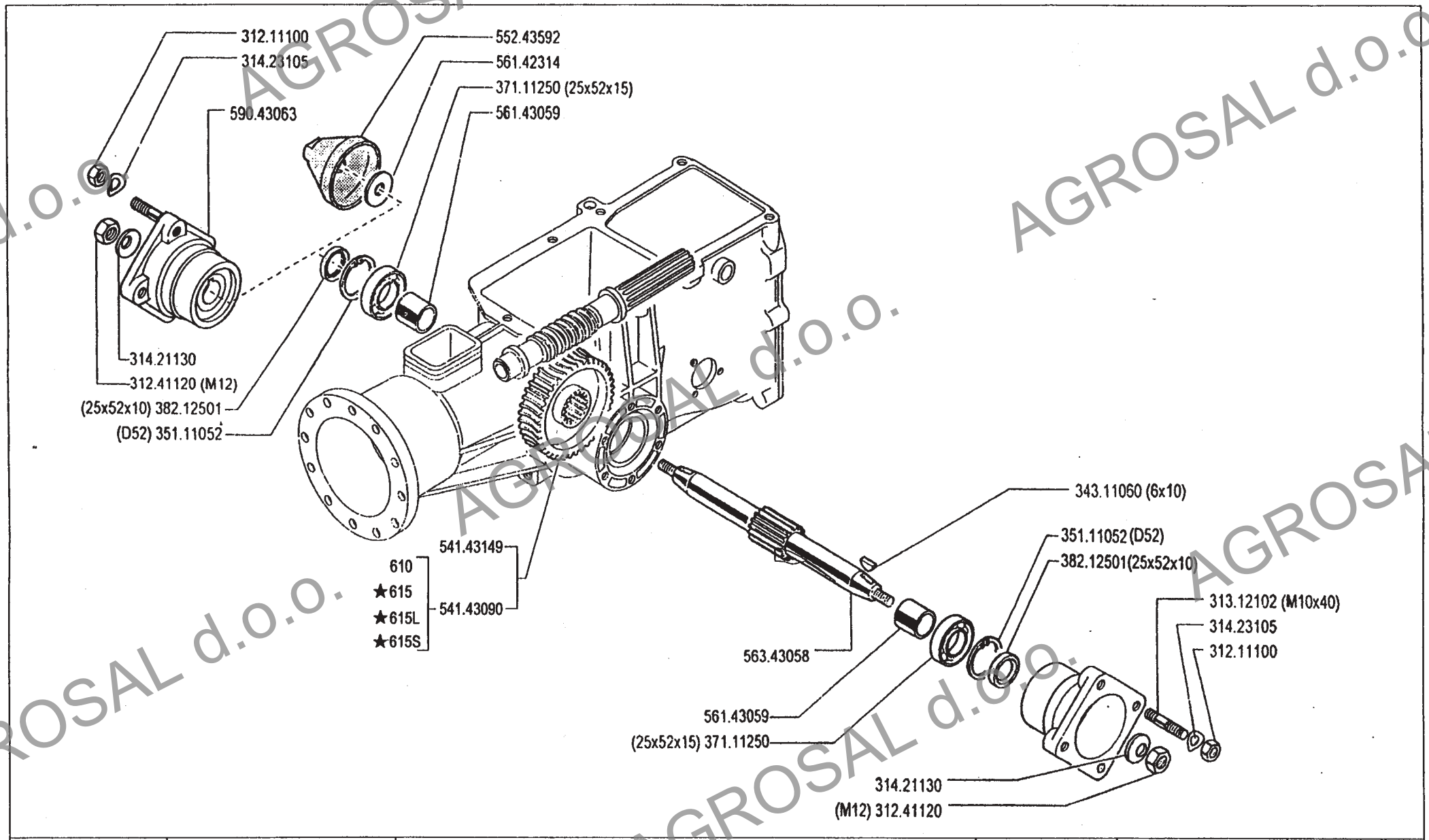

BCS	600 serie 94	**ASSE RUOTE (600 - 610 - 615 - 615L - 615S - 620 - 640)** WHEEL AXLE / ESSIEU ROUES EJE RUEDAS / RADACHSE	DALLA MACCHINA DE LA MAQUINA DE LA MACHINE FROM THE MACHINE AB DER MASCHINE ★N.	AGGIORNAMENTO REVISION MISE A JOUR APLAZAMIENTO ANPASSUNG	05	Mod. 02
					7/1999	2ENNE

AGROSAL d.o.o.

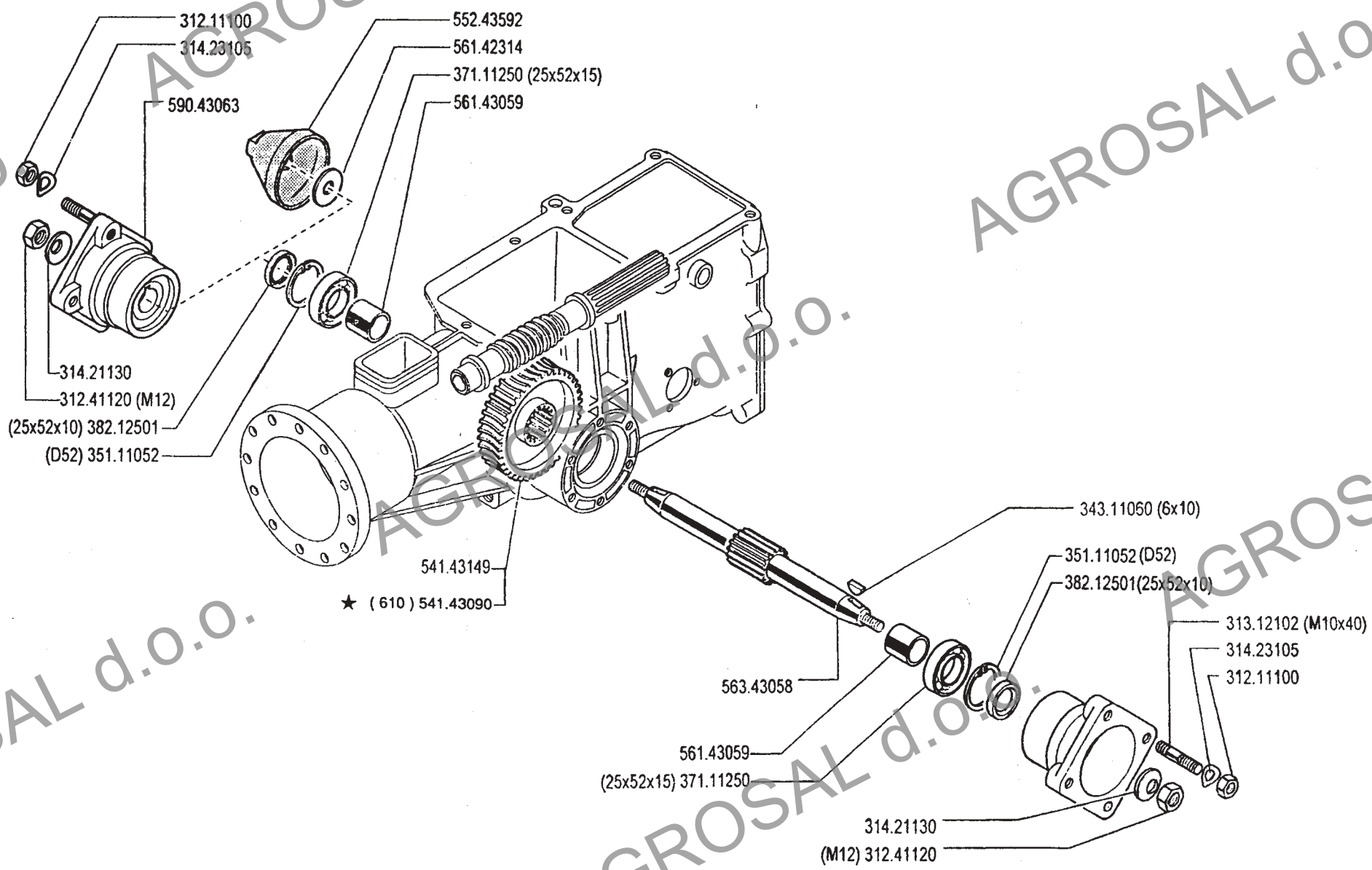

BCS	600 serie 94	ASSE RUOTE (600 - 610 - 620 - 640) EJE RUEDAS — WHEEL AXLE ESSIEU ROUES — RADACHSE	DALLA MACCHINA DE LA MAQUINA DE LA MACHINE FROM THE MACHINE AB DER MASCHINE ★ N.	AGGIORNAMENTO REVISION MISE A JOUR APLAZAMIENTO ANPASSUNG	05 .01 01.06.1995

AGROSAL d.o.o.

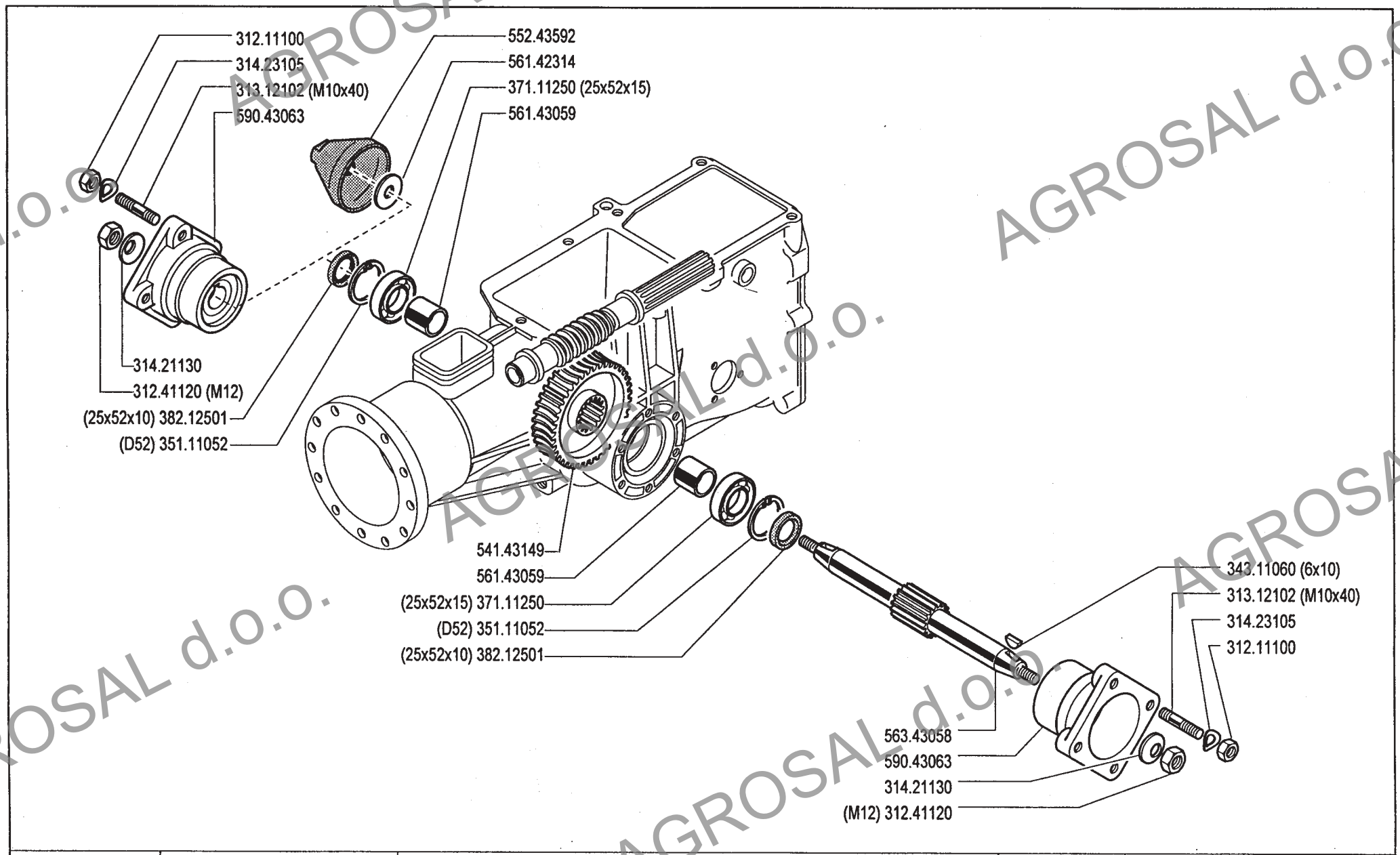

BCS 600 serie 94	ASSE RUOTE (600 - 620) EJE RUEDAS / WHEEL AXLE ESSIEU ROUES / RADACHSE	DALLA MACCHINA DE LA MAQUINA DE LA MACHINE FROM THE MACHINE AB DER MASCHINE N.		05.00 02.05.1994

AGROSAL d.o.o.

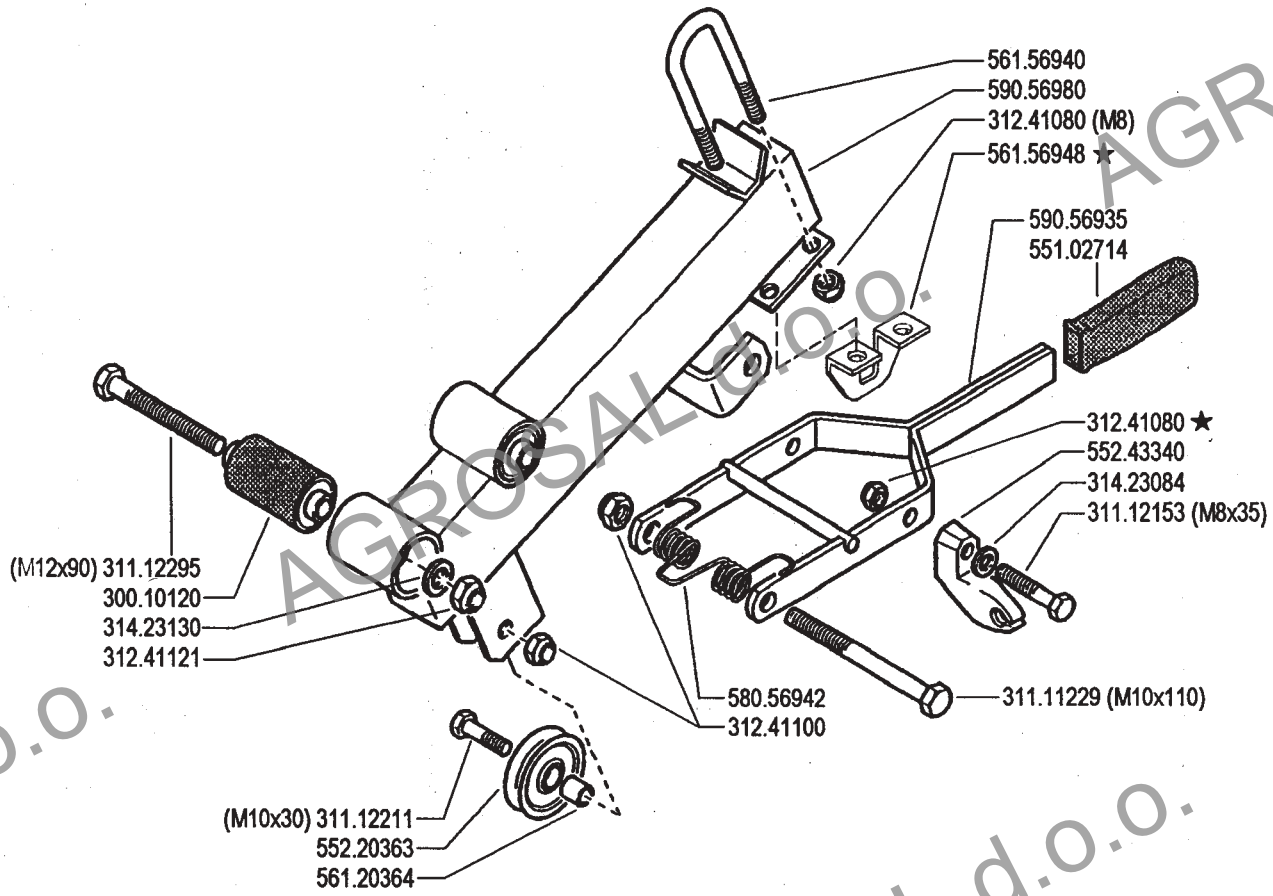

BCS	600 serie 94	**PIANTONE (600 - 610 - 620 - 630 - 630WS2)** STEERING COLUMN / PLANTON COLUMNA / LENKSÄULE	DALLA MACCHINA DE LA MAQUINA DE LA MACHINE FROM THE MACHINE AB DER MASCHINE ★N.	AGGIORNAMENTO REVISION MISE A JOUR APLAZAMIENTO ANPASSUNG	07 12/2002	Rev. 3

AGROSAL d.o.o.

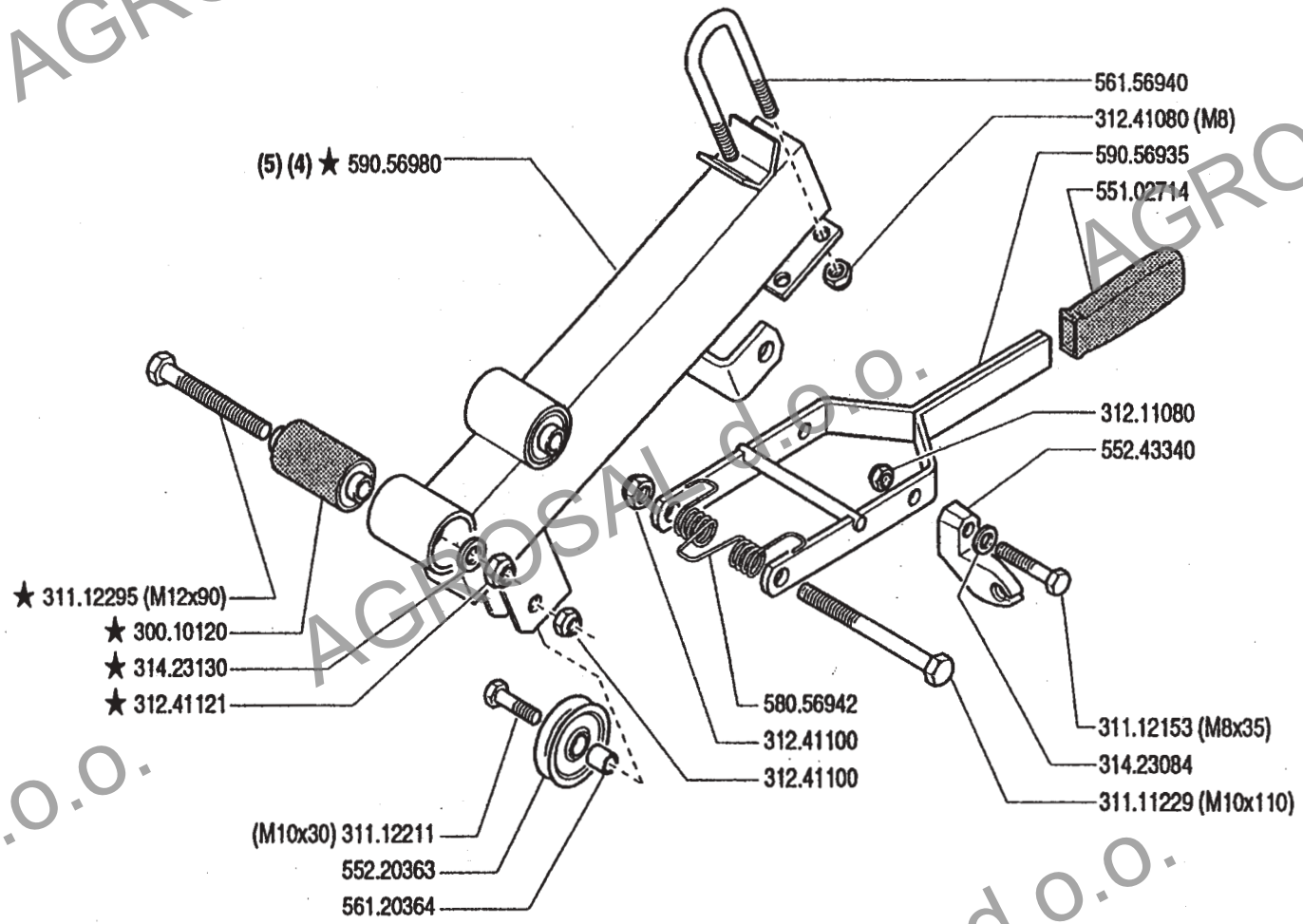

(4) (610 - 620 - 630 - 630 WS) tav. 07.02
(5) (600) tav.01.03 / tav.09.02 } sostituisce **590.56925**

BCS	600 serie 94	**PIANTONE (600-610-620-630-630WS)** STEERING COLUMN / COLUMNA PLANTON / LENKSÄULE	DALLA MACCHINA DE LA MAQUINA DE LA MACHINE FROM THE MACHINE AB DER MASCHINE ★N.	11254 (630WS) 22690 (630) 158833 (620) 2801 (610) 80952 (600)	07	Mod. 02
					4/1997	2ENNE

AGROSAL d.o.o.

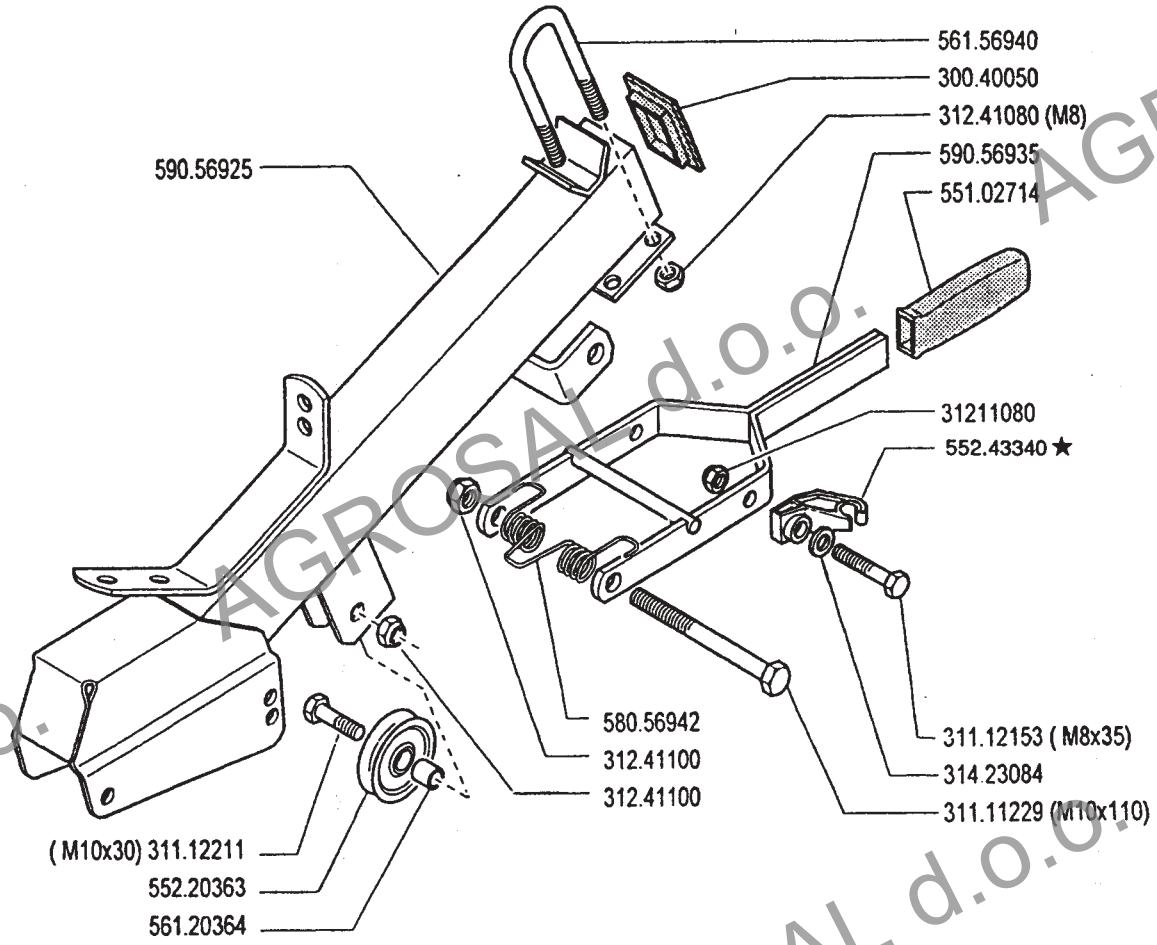

BCS	600 serie 94	PIANTONE (600 - 610 - 620 - 630 - 630 WS) COLUMNA / STEERING COLUMN PLANTON / LENKSÄULE	DALLA MACCHINA DE LA MAQUINA DE LA MACHINE FROM THE MACHINE AB DER MASCHINE ★ N.	AGGIORNAMENTO REVISION MISE A JOUR APLAZAMIENTO ANPASSUNG	07 .01 01.06.1995

AGROSAL d.o.o.

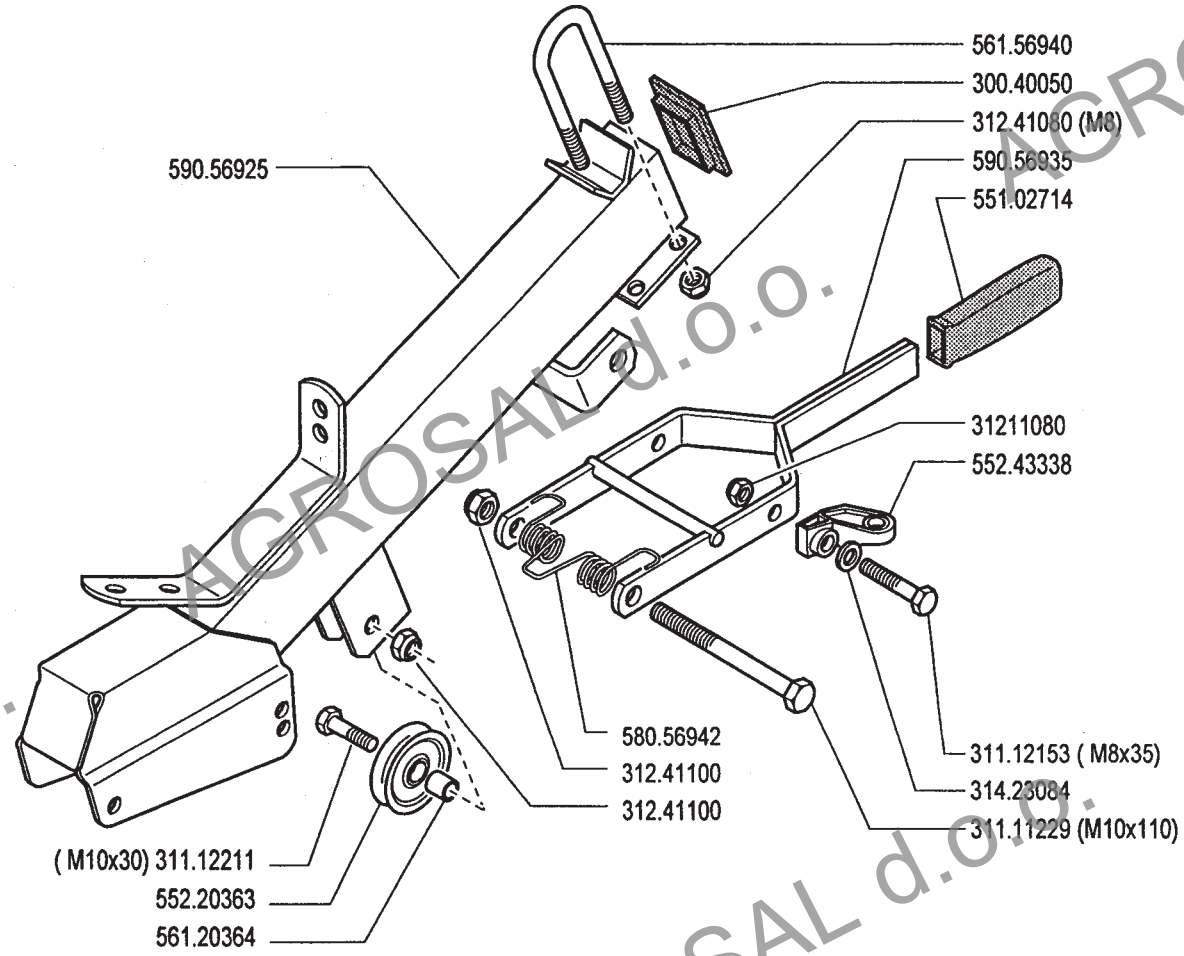

BCS 600 serie 94	PIANTONE COLUMNA — STEERING COLUMN PLANTON — LENKSÄULE	DALLA MACCHINA DE LA MAQUINA DE LA MACHINE FROM THE MACHINE AB DER MASCHINE N.		07.00 02.05.1994

AGROSAL d.o.o.

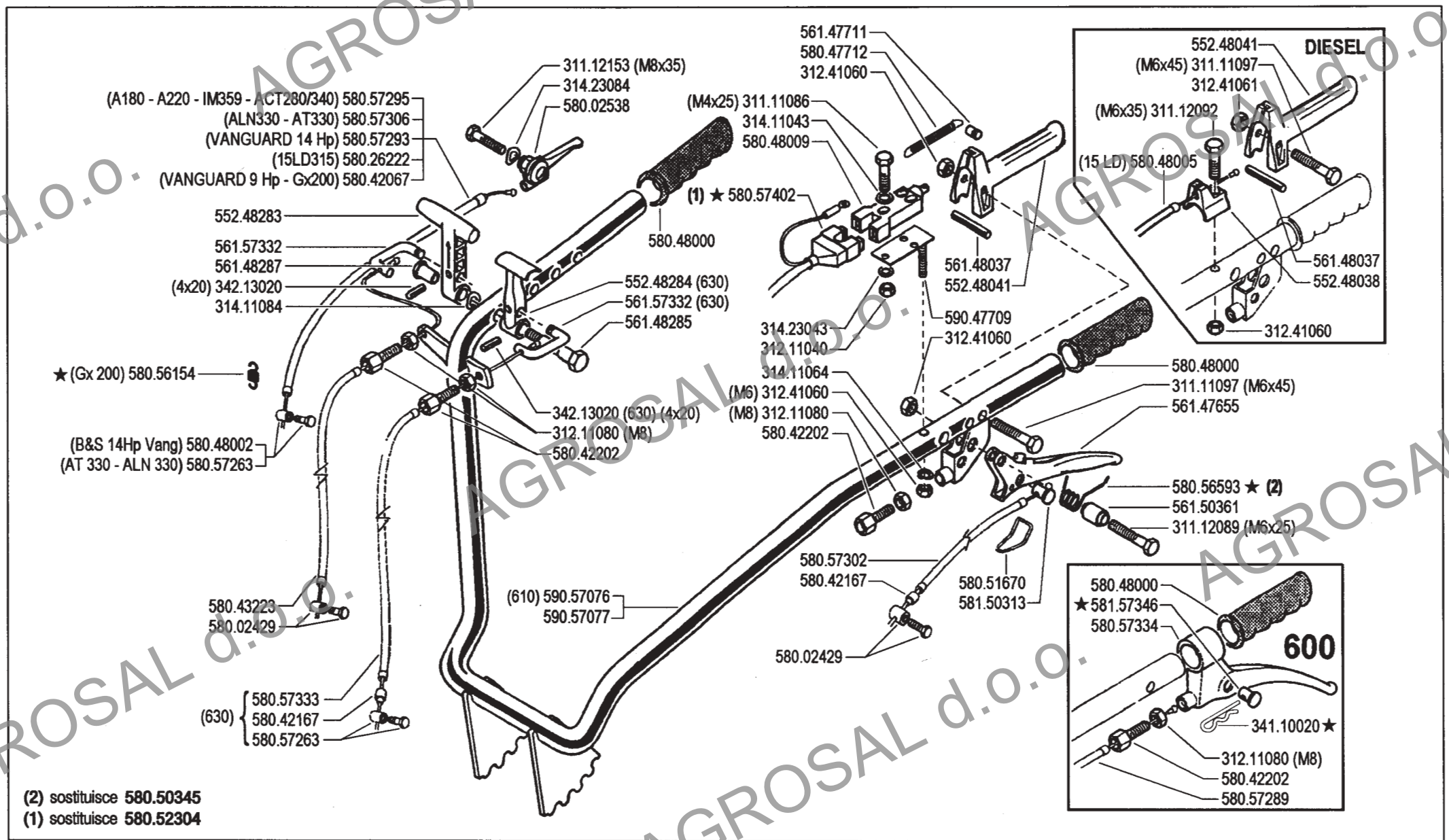

(2) sostituisce **580.50345**
(1) sostituisce **580.52304**

BCS	600 serie 94	**MANUBRIO (600 - 610 - 620 - 630)** HANDLEBAR / MANCHERON MANILLAR / LENKER	DALLA MACCHINA DE LA MAQUINA DE LA MACHINE FROM THE MACHINE AB DER MASCHINE ★N.	AGGIORNAMENTO REVISION MISE A JOUR APLAZAMIENTO ANPASSUNG	08 11/2002	Rev. 4

AGROSAL d.o.o.

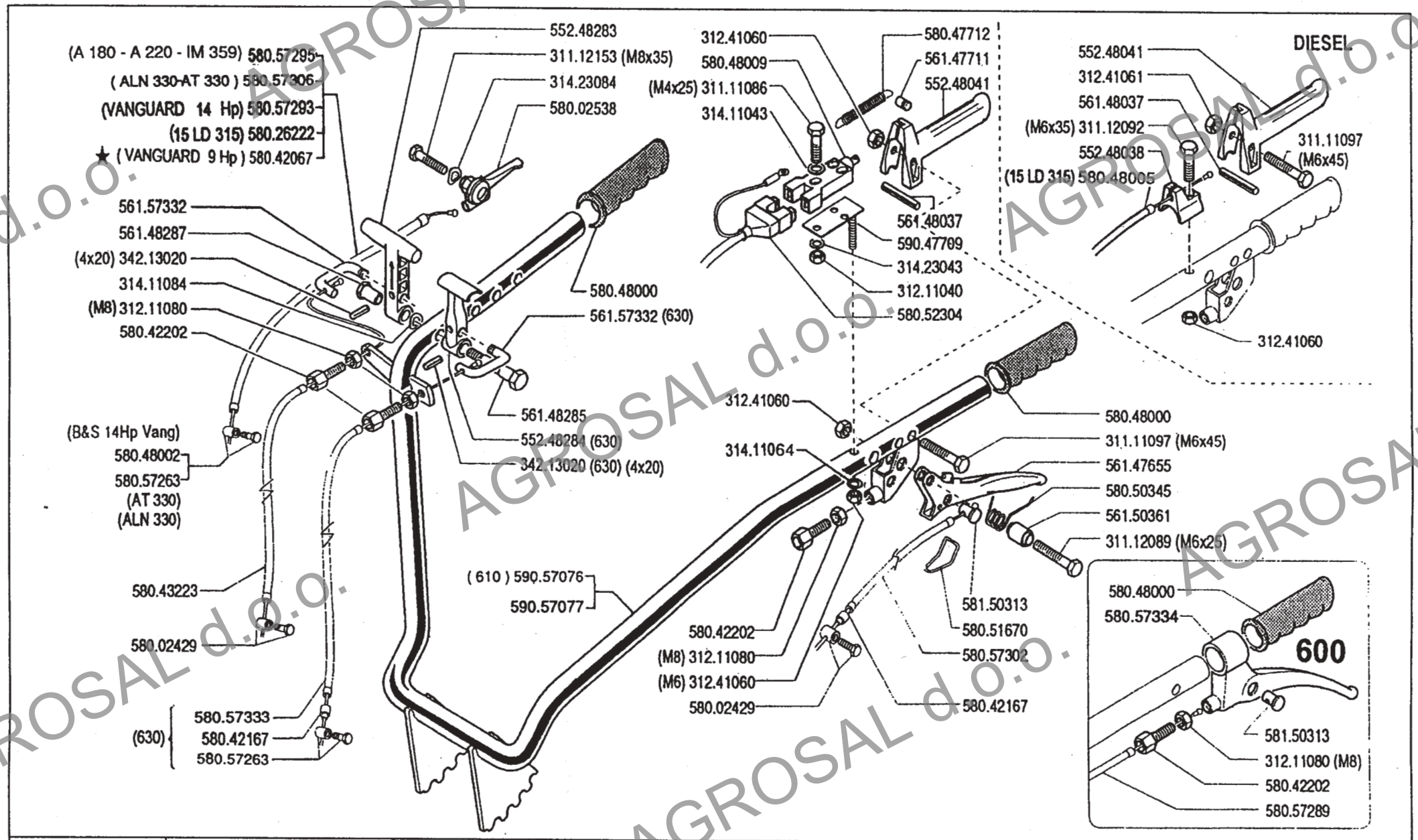

BCS	600 serie 94	MANUBRIO (600-610-620-630) HANDLEBAR MANILLAR MANCHERON LENKER	DALLA MACCHINA DE LA MAQUINA DE LA MACHINE FROM THE MACHINE AB DER MASCHINE ★N.	AGGIORNAMENTO REVISION MISE A JOUR APLAZAMIENTO ANPASSUNG	08	Mod. 03 9/1997

AGROSAL d.o.o.

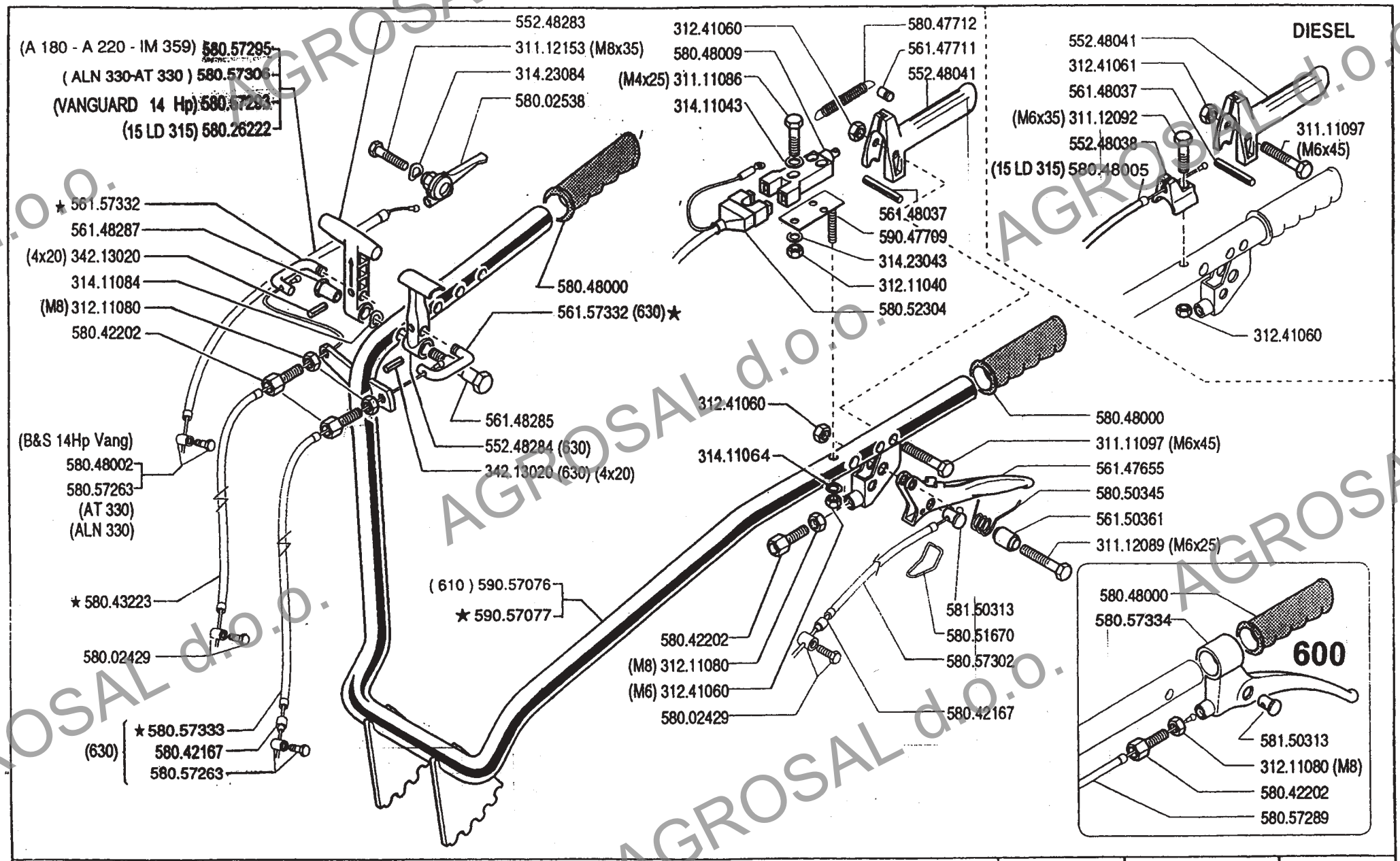

BCS	600 serie 94	MANUBRIO (600 - 610 - 620 - 630) MANILLAR / HANDLEBAR MANCHERON / LENKER	DALLA MACCHINA DE LA MAQUINA DE LA MACHINE FROM THE MACHINE AB DER MASCHINE ★ N.	21832 (630) 156401 (620) 80724 (600)	08.02 02.09.1996

AGROSAL d.o.o.

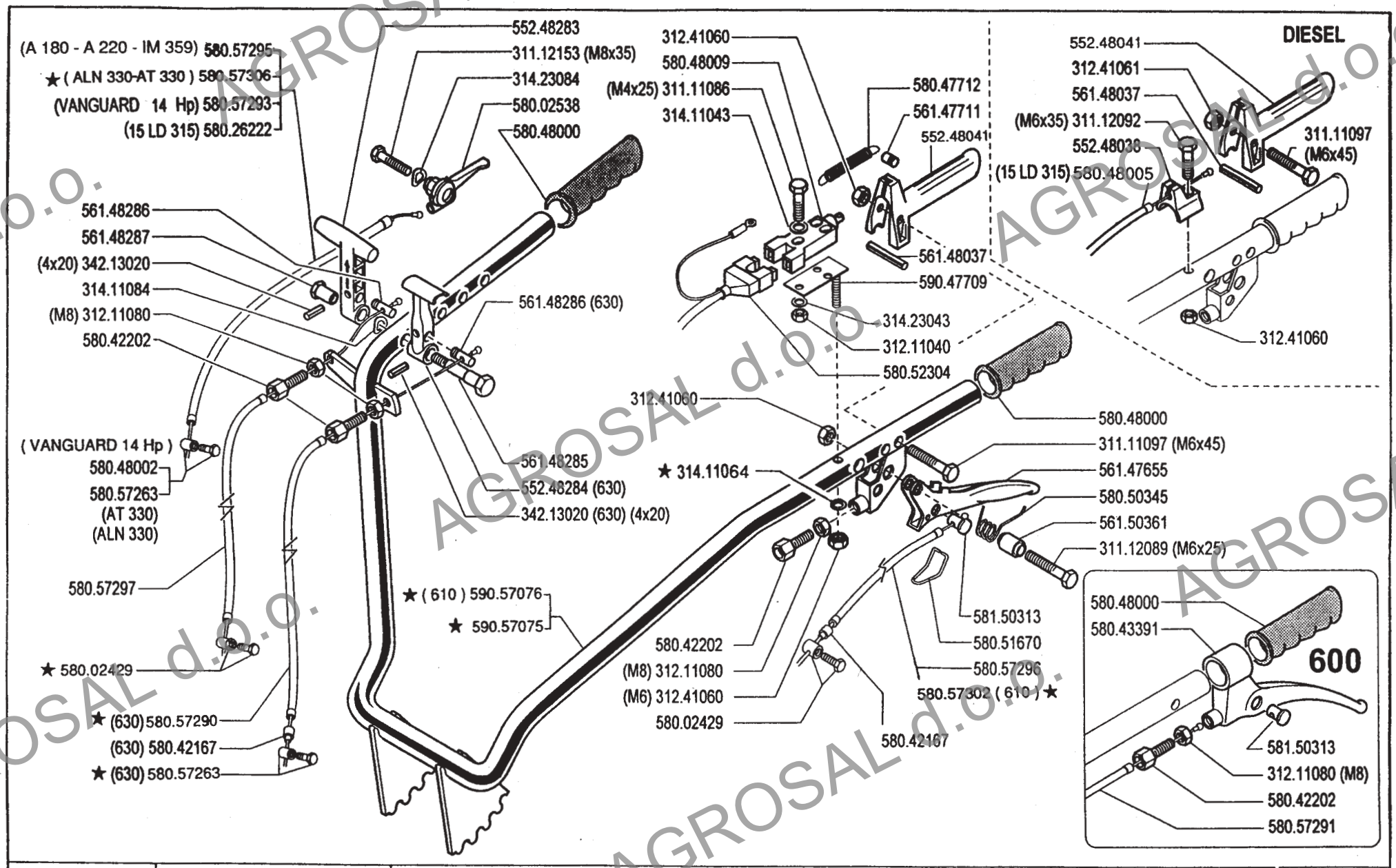
(A 180 - A 220 - IM 359) 580.57295
★ (ALN 330-AT 330) 580.57306
(VANGUARD 14 Hp) 580.57293
(15 LD 315) 580.26222
552.48283
311.12153 (M8x35)
314.23084
580.02538
580.48000
312.41060
580.48009
(M4x25) 311.11086
314.11043
580.47712
561.47711
552.48041
561.48037
590.47709
314.23043
312.11040
580.52304
DIESEL
552.48041
312.41061
561.48037
(M6x35) 311.12092
552.48038
(15 LD 315) 580.48005
311.11097 (M6x45)
312.41060
561.48286
561.48287
(4x20) 342.13020
314.11084
(M8) 312.11080
580.42202
561.48286 (630)
(VANGUARD 14 Hp)
580.48002
580.57263
(AT 330)
(ALN 330)
561.48285
552.48284 (630)
342.13020 (630) (4x20)
580.57297
★ 580.02429
★ (630) 580.57290
(630) 580.42167
★ (630) 580.57263
★ (610) 590.57076
★ 590.57075
312.41060
★ 314.11064
580.48000
311.11097 (M6x45)
561.47655
580.50345
561.50361
311.12089 (M6x25)
581.50313
580.51670
580.57296
580.57302 (610) ★
580.42202
(M8) 312.11080
(M6) 312.41060
580.02429
580.42167
580.48000
580.43391
600
581.50313
312.11080 (M8)
580.42202
580.57291
BCS
600 serie 94
MANUBRIO (600 - 610 - 620 - 630)
MANILLAR
HANDLEBAR
MANCHERON
LENKER
DALLA MACCHINA
DE LA MAQUINA
DE LA MACHINE
FROM THE MACHINE
AB DER MASCHINE
★ N.
20650 (630)
152388 (620)
80275 (600)
08 .01
01.06.1995

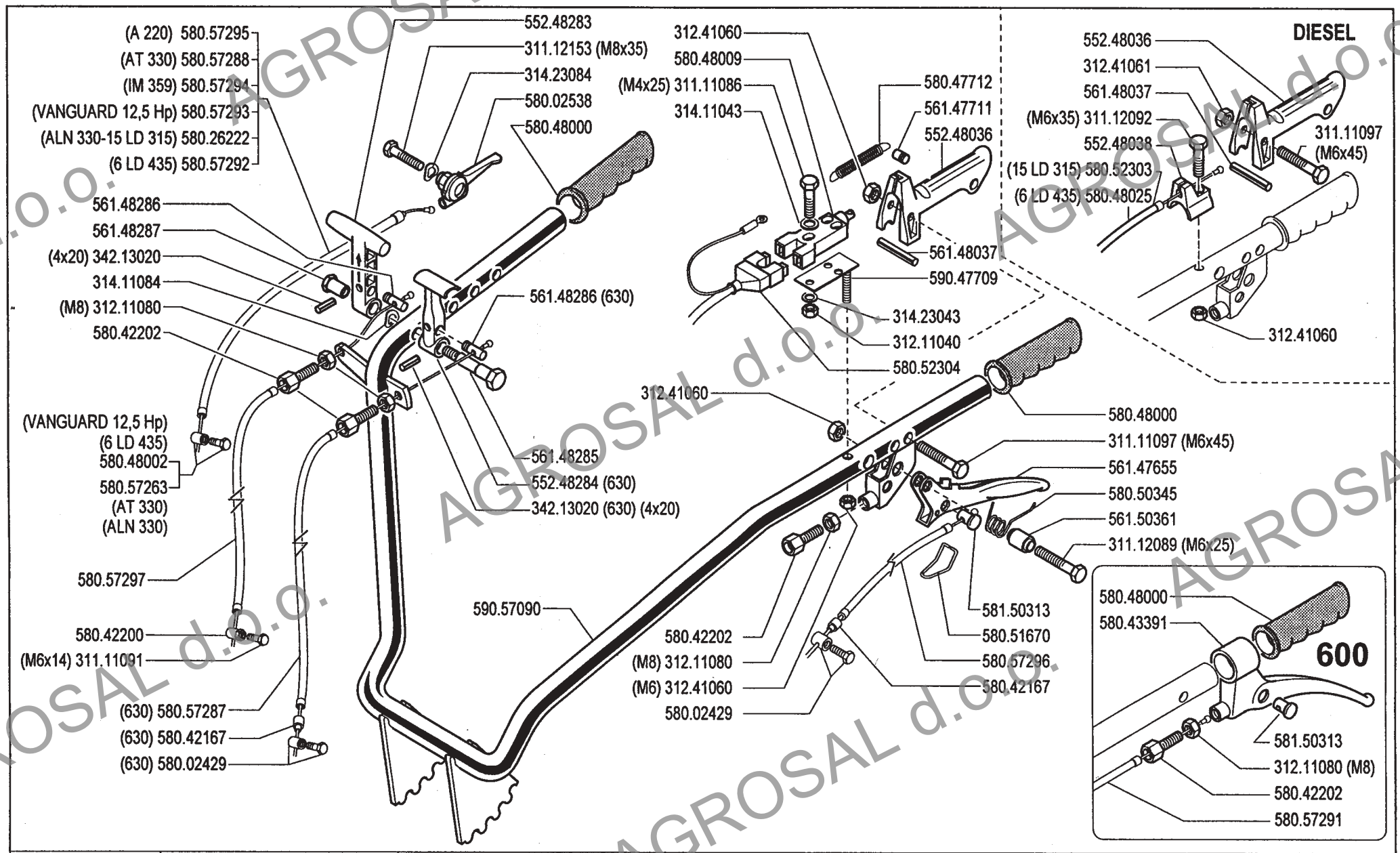

BCS 600 serie 94	MANUBRIO MANILLAR / HANDLEBAR MANCHERON / LENKER	DALLA MACCHINA DE LA MAQUINA DE LA MACHINE FROM THE MACHINE AB DER MASCHINE N.		08.00 02.05.1994

AGROSAL d.o.o.

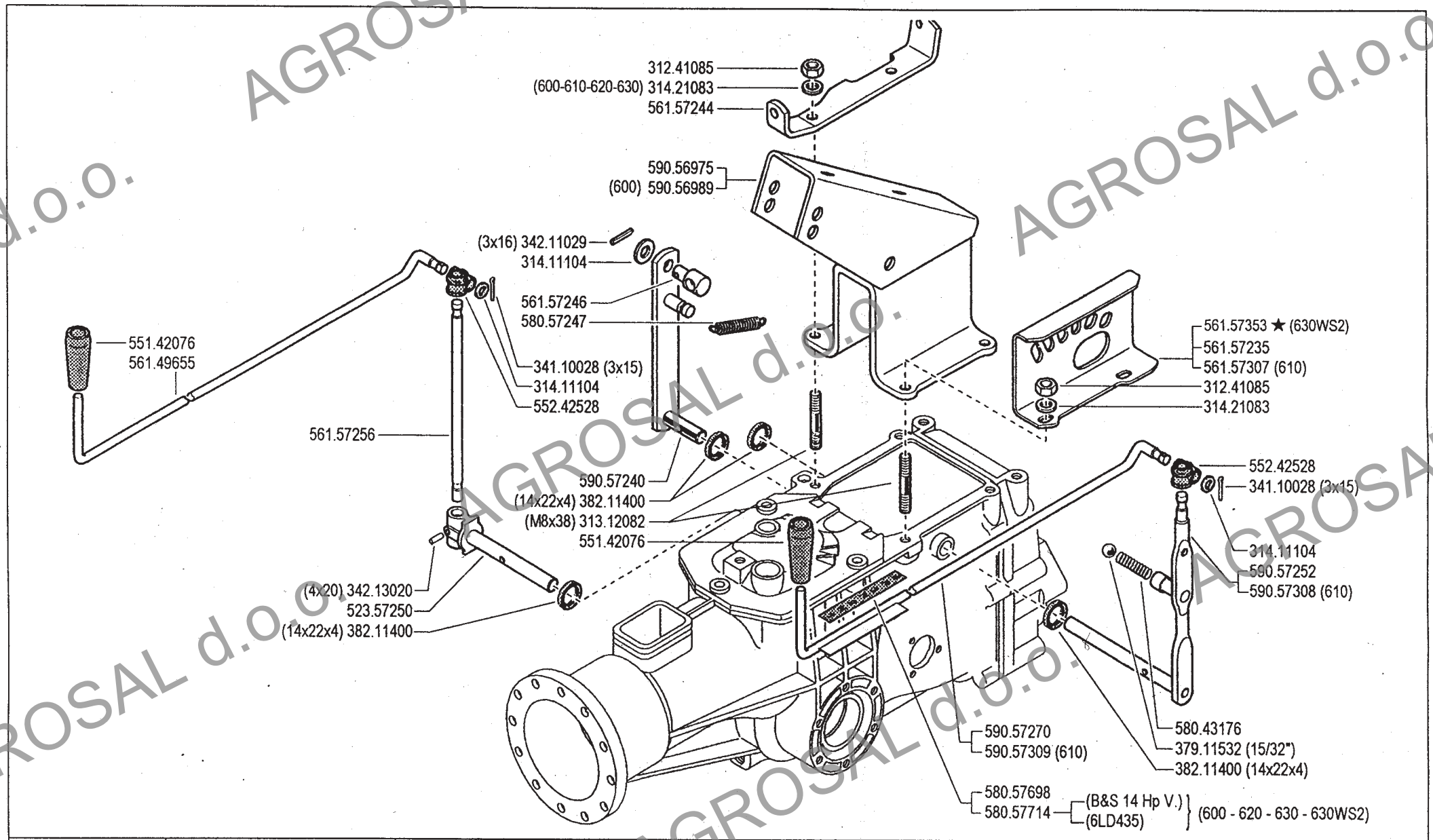

BCS	600 serie 94	COMANDI (600 - 610 - 620 - 630 - 630WS2) CONTROLS / COMMANDES MANDOS / ANTRIEBE	★	DALLA MACCHINA / DE LA MAQUINA / DE LA MACHINE / FROM THE MACHINE / AB MASCHINE	ALLA MACCHINA / A LA MAQUINA / A LA MACHINE / TO THE MACHINE / BIS MASCHINE	09 Rev. 4
			N.	721207	721222	1/2004
				721255		

AGROSAL d.o.o.

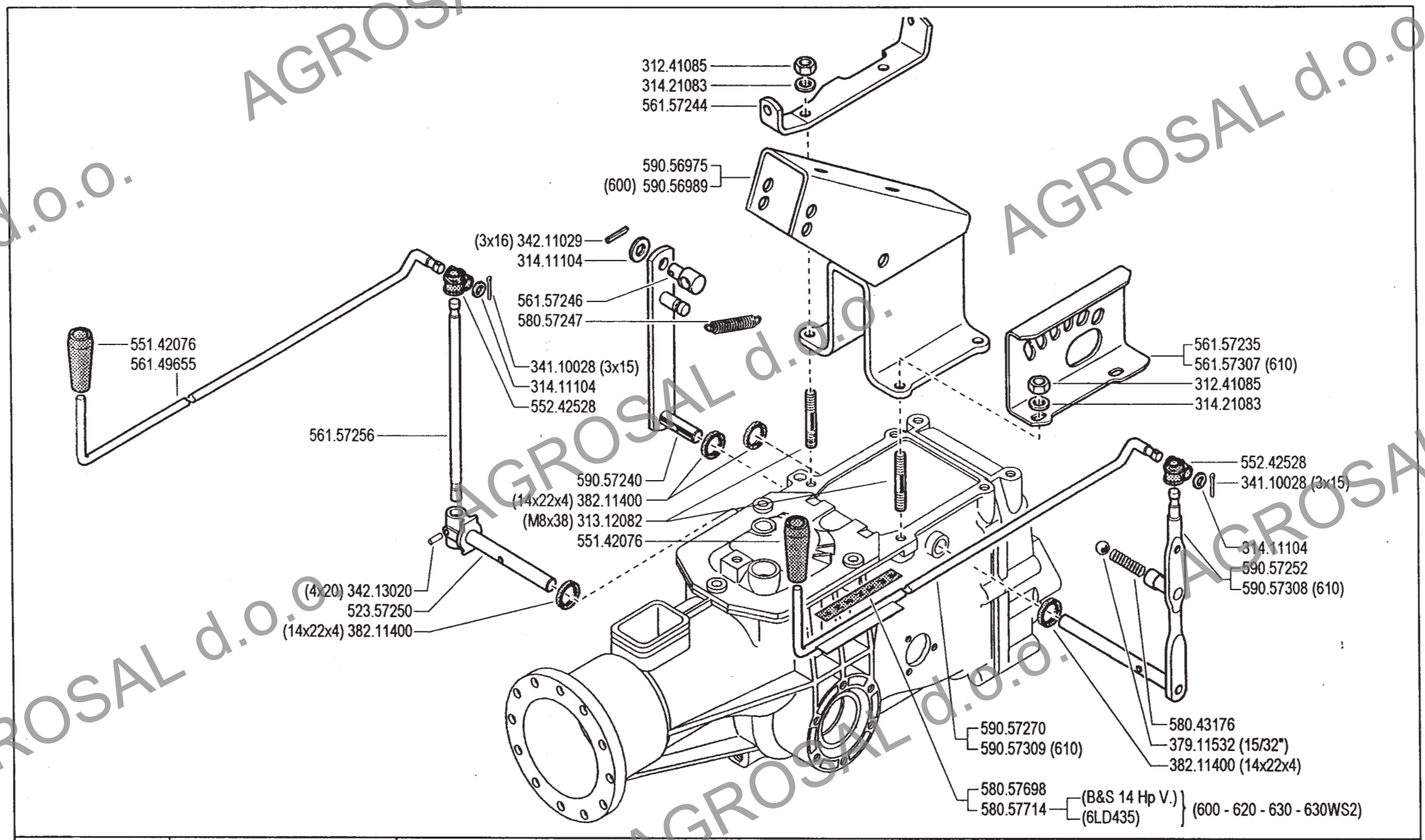

BCS	600 serie 94	**COMANDI (600 - 610 - 620 - 630 - 630WS2★)** CONTROLS / COMMANDES MANDOS / ANTRIEBE	DALLA MACCHINA DE LA MAQUINA DE LA MACHINE FROM THE MACHINE AB DER MASCHINE ★N.	AGGIORNAMENTO REVISION MISE A JOUR APLAZAMIENTO ANPASSUNG	09	Rev. 3
					7/1999	2ENNE

AGROSAL d.o.o.

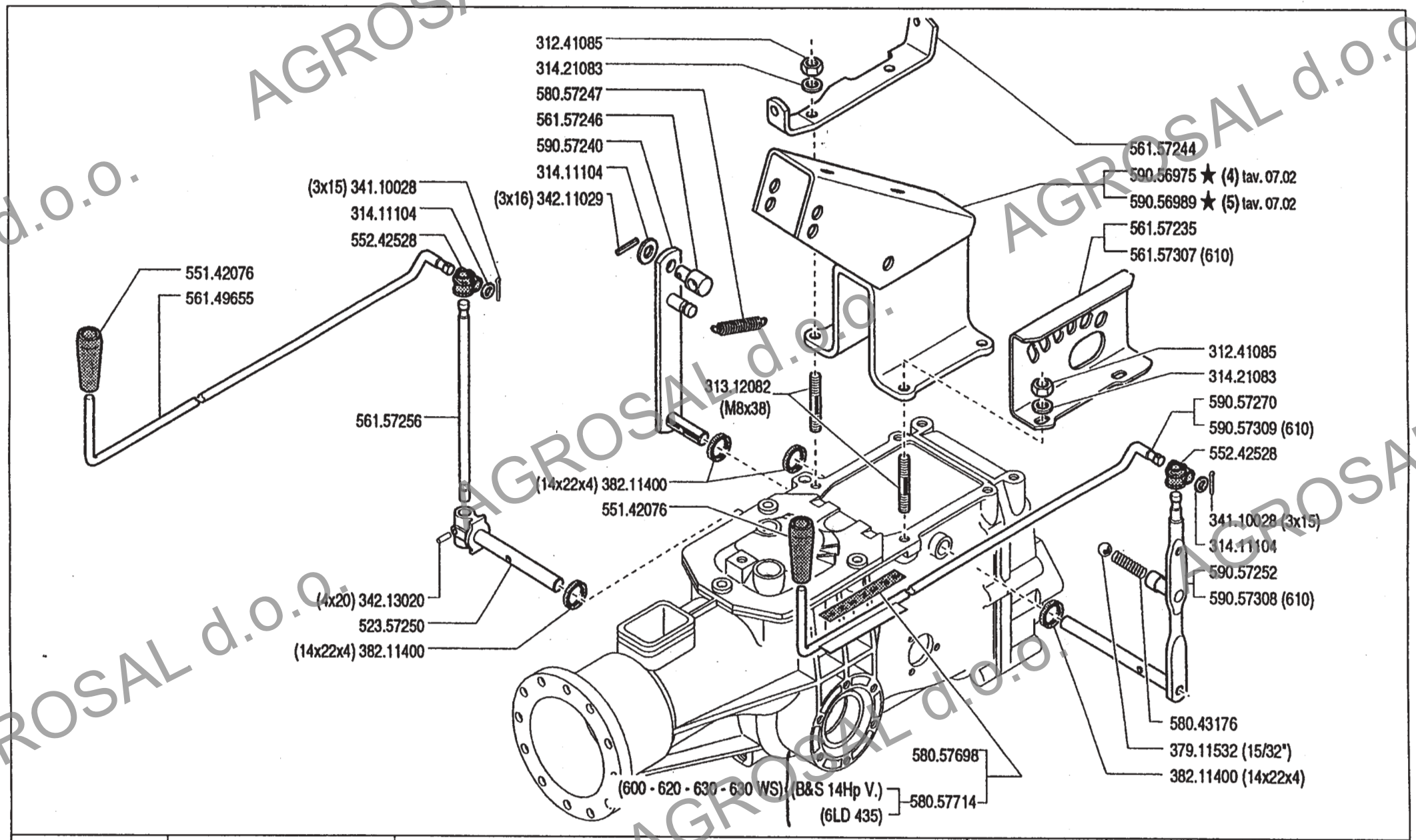

BCS	600 serie 94	COMANDI (600-610-620-630-630WS) CONTROLS / COMMANDES MANDOS / ANTRIEBE	DALLA MACCHINA DE LA MAQUINA DE LA MACHINE FROM THE MACHINE AB DER MASCHINE ★N.	11254 (630WS) 22690 (630) 158833 (620) 2801 (610) 80952 (600)	09 4/1997	Mod. 02

AGROSAL d.o.o.

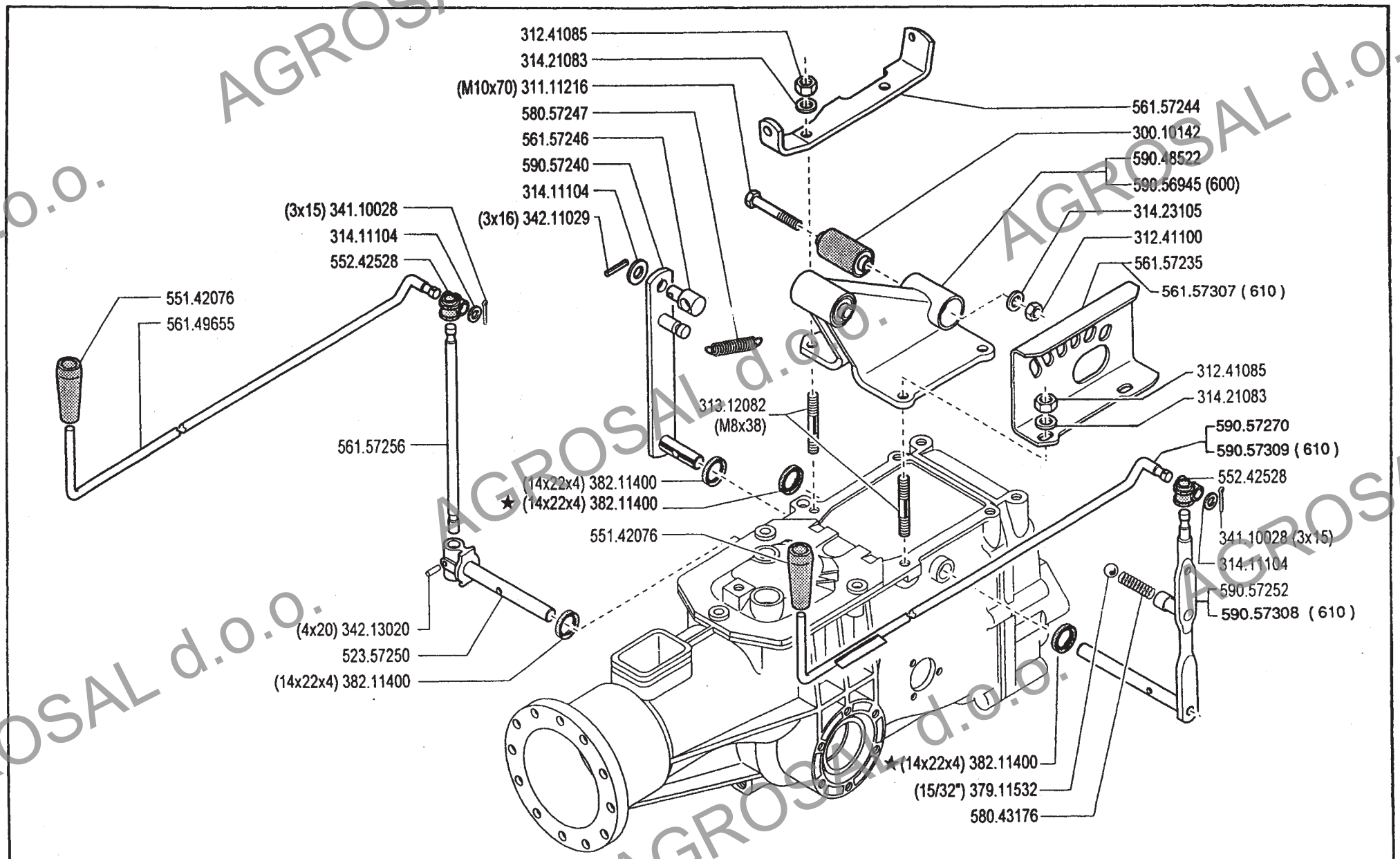

BCS	600 serie 94	**COMANDI** (600 - 610 - 620 - 630 - 630 WS)	DALLA MACCHINA DE LA MAQUINA DE LA MACHINE FROM THE MACHINE AB DER MASCHINE		09 .01
		MANDOS / CONTROLS		10554 (630WS)	
				20953 (630)	
		COMMANDES / ANTRIEBE		154135 (620)	01.06.1995
			★ N.	80539 (600)	

AGROSAL d.o.o.

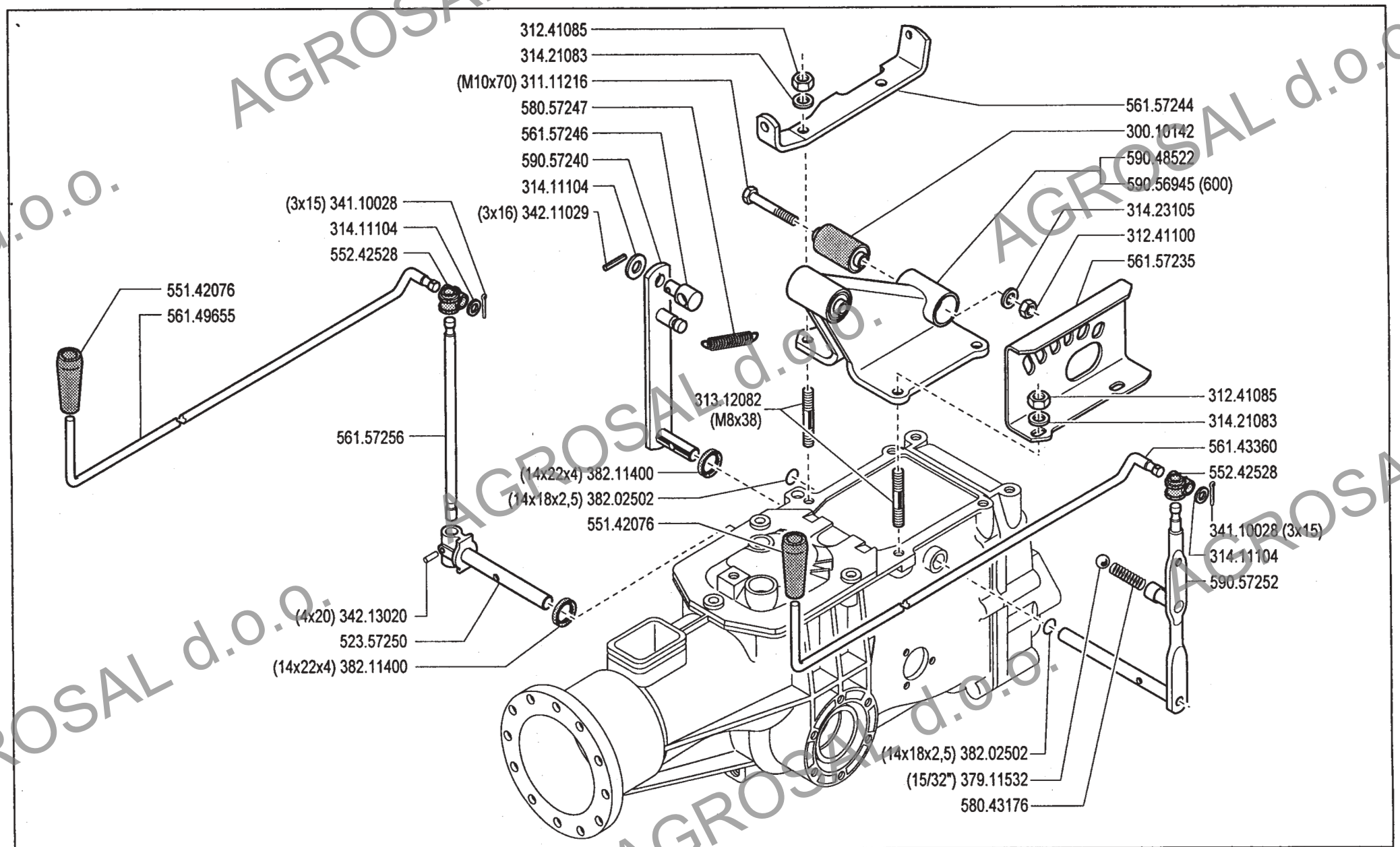

BCS	600 serie 94	COMANDI MANDOS / CONTROLS COMMANDES / ANTRIEBE	DALLA MACCHINA DE LA MAQUINA DE LA MACHINE FROM THE MACHINE AB DER MASCHINE N.		09.00 02.05.1994

AGROSAL d.o.o.

	A	B	C
3.50 - 8" (600)	391.13502	394.13502	580.43370
3.50 - 8"	391.13502	394.13502	580.43250
4.00 - 8"	391.14008	394.14008	580.43250
4.0 - 10"	391.14010	394.14010	580.48330
5.0 - 10"	391.15010	394.15010	580.48330
6.5 / 80 - 12"	391.16018	394.16018	580.44804
21 x 11.00 - 8"	391.13501	TUBELESS	580.57795 ★ (1)

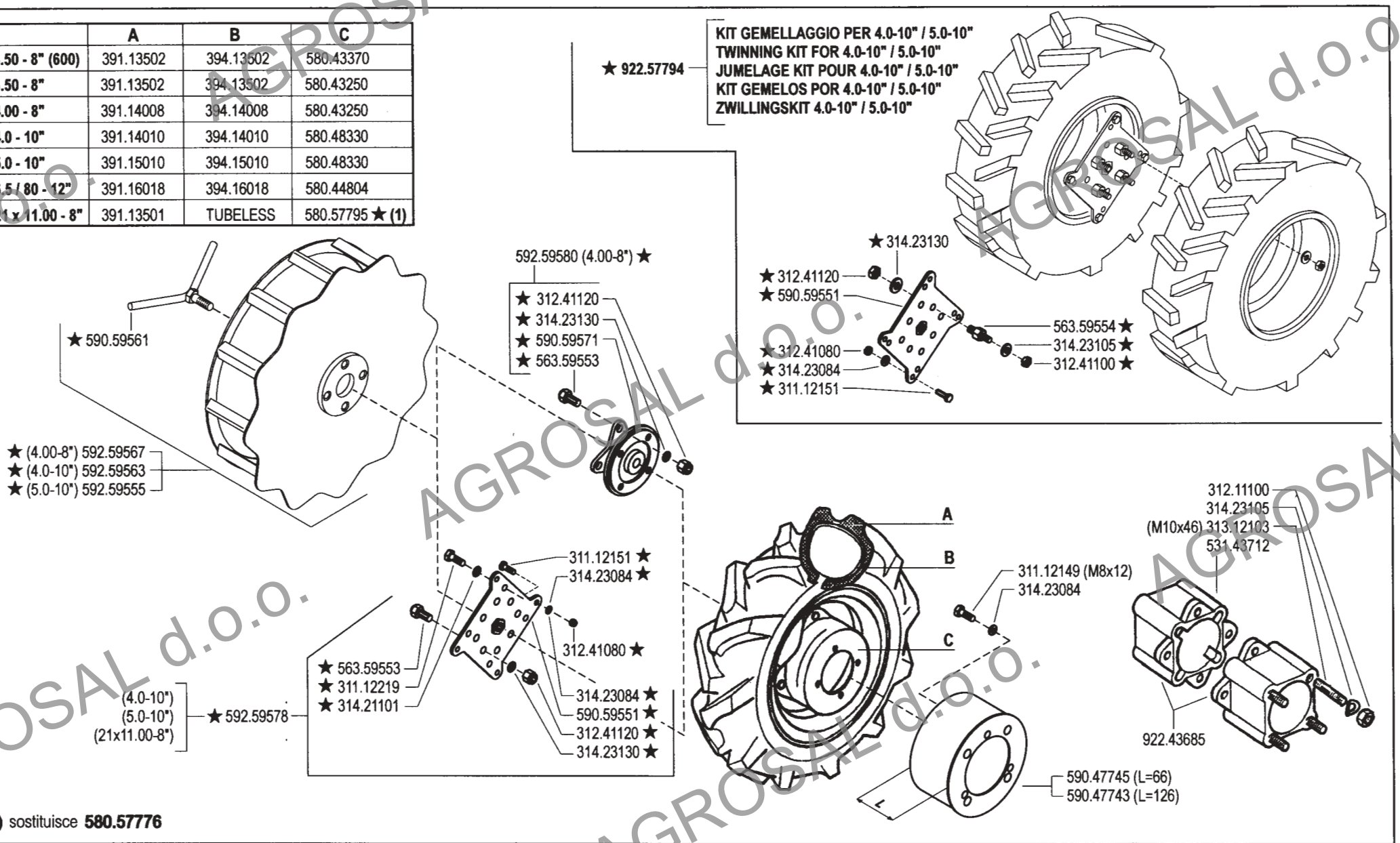

(1) sostituisce **580.57776**

BCS	600 serie 94	**RUOTE** WHEELS RUEDAS ROUES RÄDER	DALLA MACCHINA DE LA MAQUINA DE LA MACHINE FROM THE MACHINE AB DER MASCHINE ★N.	AGGIORNAMENTO REVISION MISE A JOUR APLAZAMIENTO ANPASSUNG	11 12/2003	Rev. 4

AGROSAL d.o.o.

	A	B	C
3. 50 - 8" (600)	391.13502	394.13502	580.43370
3.50 - 8"	391.13502	394.13502	580.43250
4.00 - 8"	391.14008	394.14008	580.43250
4.0 - 10"	391.14010	394.14010	580.48330
5.0 - 10"	391.15010	394.15010	580.48330
6.5/80 - 12"	391.16018	394.16018	580.44804
21 x 11.00 - 8"	391.13501	TUBELESS	580.57776

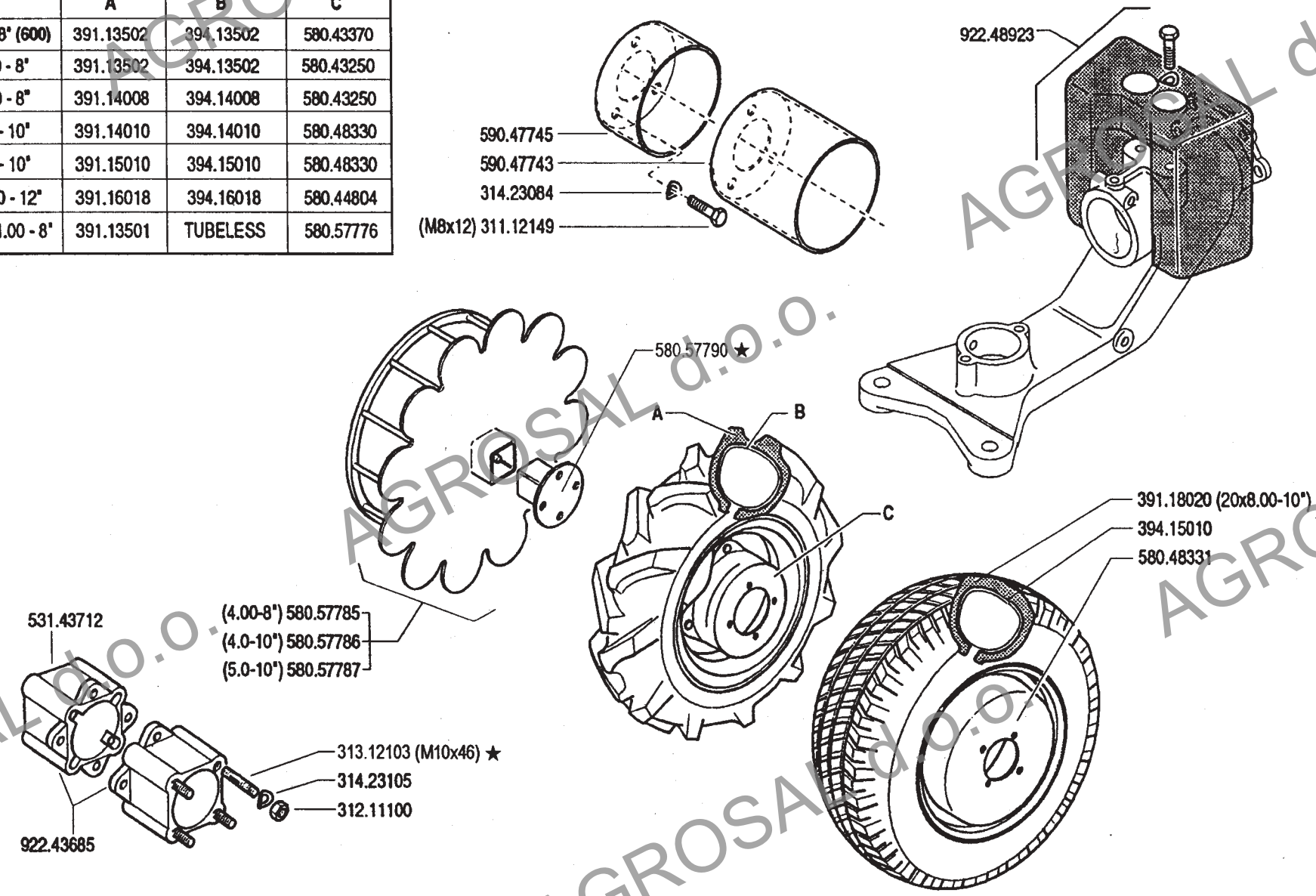

BCS	600 serie 94	RUOTE WHEELS RUEDAS	ROUES RÄDER	DALLA MACCHINA DE LA MAQUINA DE LA MACHINE FROM THE MACHINE AB DER MASCHINE ★N.	AGGIORNAMENTO REVISION MISE A JOUR APLAZAMIENTO ANPASSUNG	11 12/2002	Rev. 3

AGROSAL d.o.o.

	A	B	C
3. 50 - 8" (600)	391.13502	394.13502	580.43370
3.50 - 8"	391.13502	394.13502	580.43250
4.00 - 8"	391.14008	394.14008	580.43250
4.0 - 10"	391.14010	394.14010	580.48330
5.0 - 10"	391.15010	394.15010	580.48330
6.5/80 - 12"	391.16018	394.16018	580.44804
21 x 11.00 - 8"	391.13501	TUBELESS	580.57776 ★

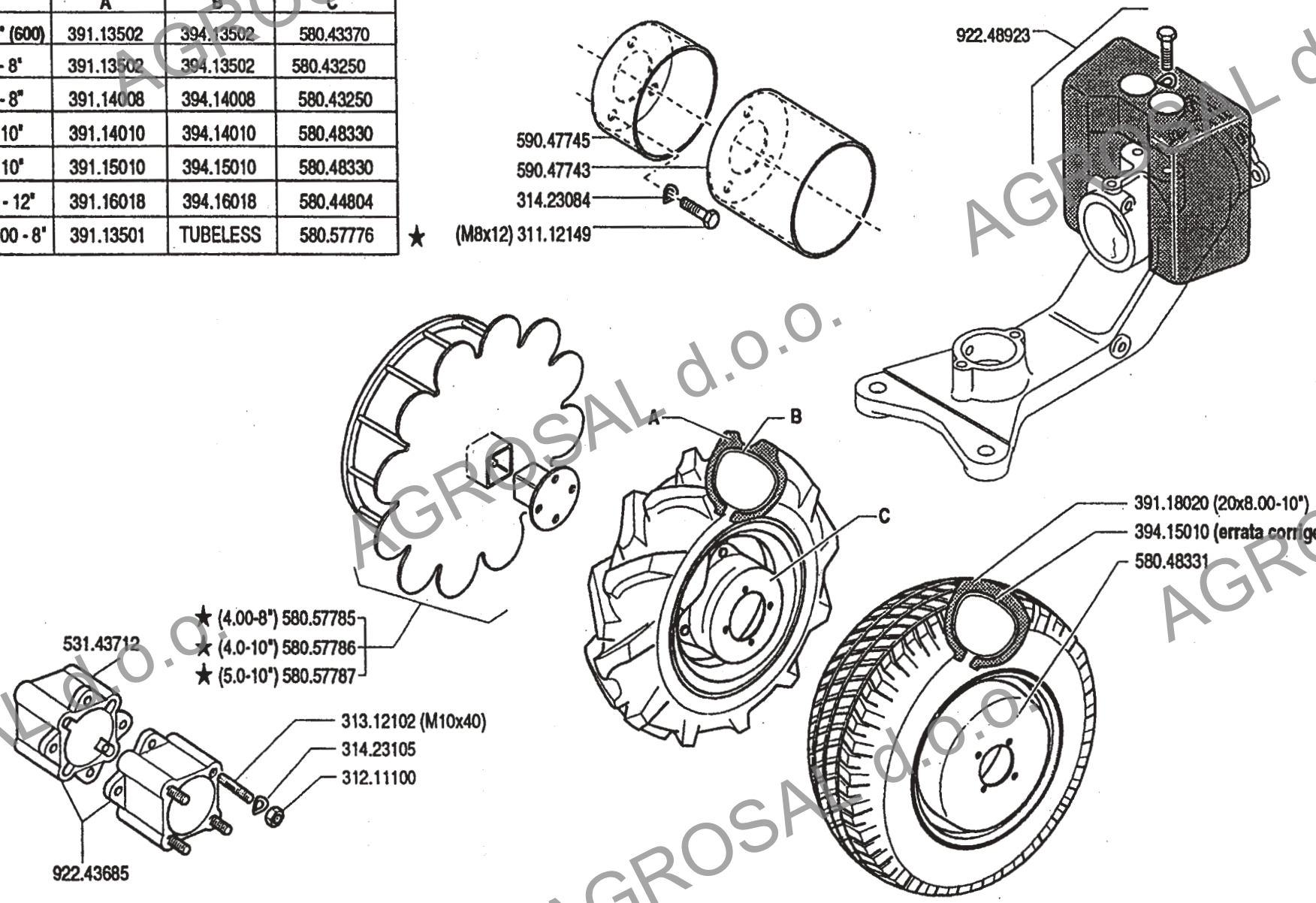

BCS	600 serie 94	RUOTE WHEELS RUEDAS	ROUES RADER	DALLA MACCHINA DE LA MAQUINA DE LA MACHINE FROM THE MACHINE AB DER MASCHINE ★N.	AGGIORNAMENTO REVISION MISE A JOUR APLAZAMIENTO ANPASSUNG	11 10/1997	Mod. 02

AGROSAL d.o.o.

	A	B	C	
3.50-8" (600)	391.13502	394.13502	580.43370	
3. 50 - 8"	391.13502	394.13502	580.43250	★
4.00 - 8"	391.14008	394.14008	580.43250	
4.0 - 10"	391.14010	394.14010	580.48330	
5.0 - 10"	391.15010	394.15010	580.48330	
6.5/80-12"	391.16018	394.16018	580.44804	★

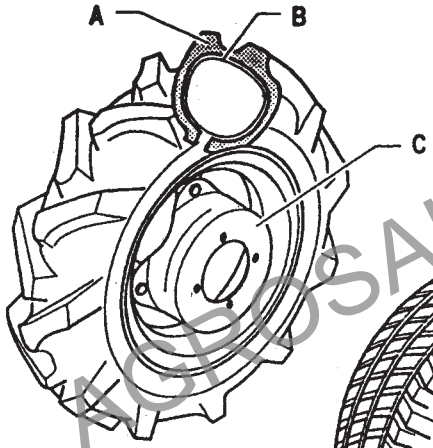

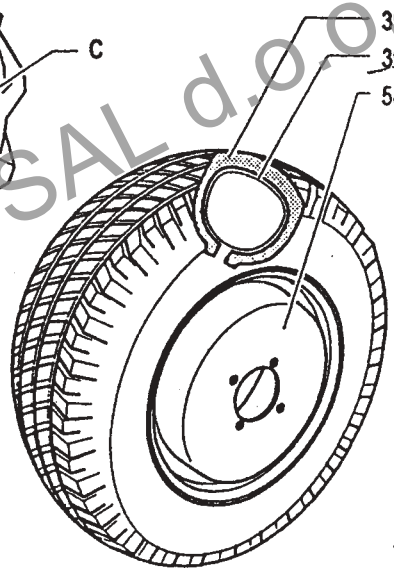

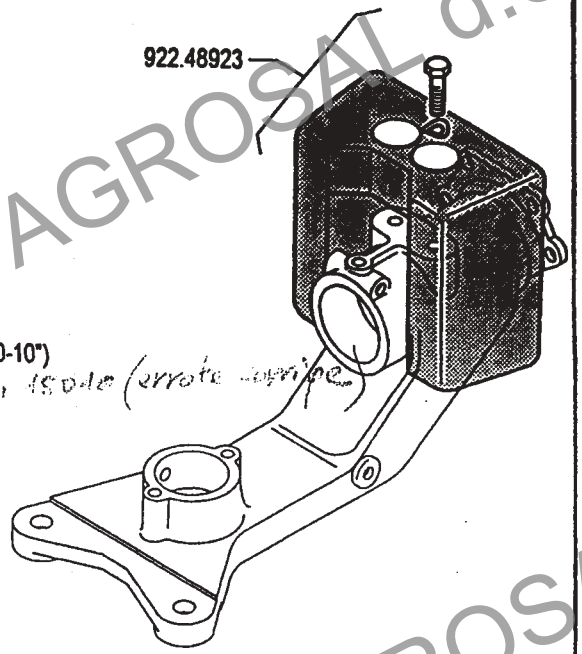

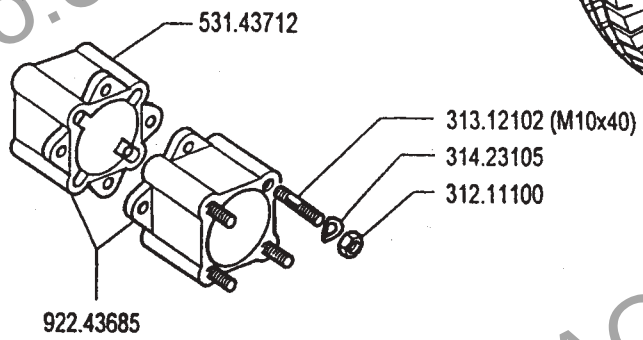

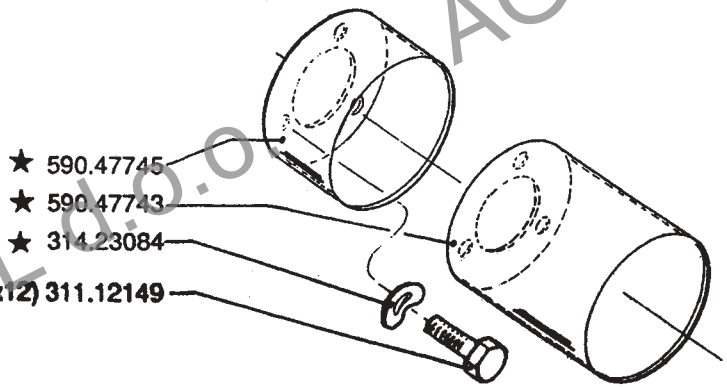

BCS	600 serie 94	RUOTE RUEDAS / WHEELS ROUES / RADER	DALLA MACCHINA DE LA MAQUINA DE LA MACHINE FROM THE MACHINE AB DER MASCHINE ★N.	AGGIORNAMENTO REVISION MISE A JOUR APLAZAMIENTO ANPASSUNG	11.01 01.06.1995

AGROSAL d.o.o.

	A	B	C
3. 50 - 8"	391.13502	394.13502	580.43370(600)
4.00 - 8"	391.14008	394.14008	580.43250
4.0 - 10"	391.14010	394.14010	580.48330
5.0 - 10"	391.15010	394.15010	580.48330

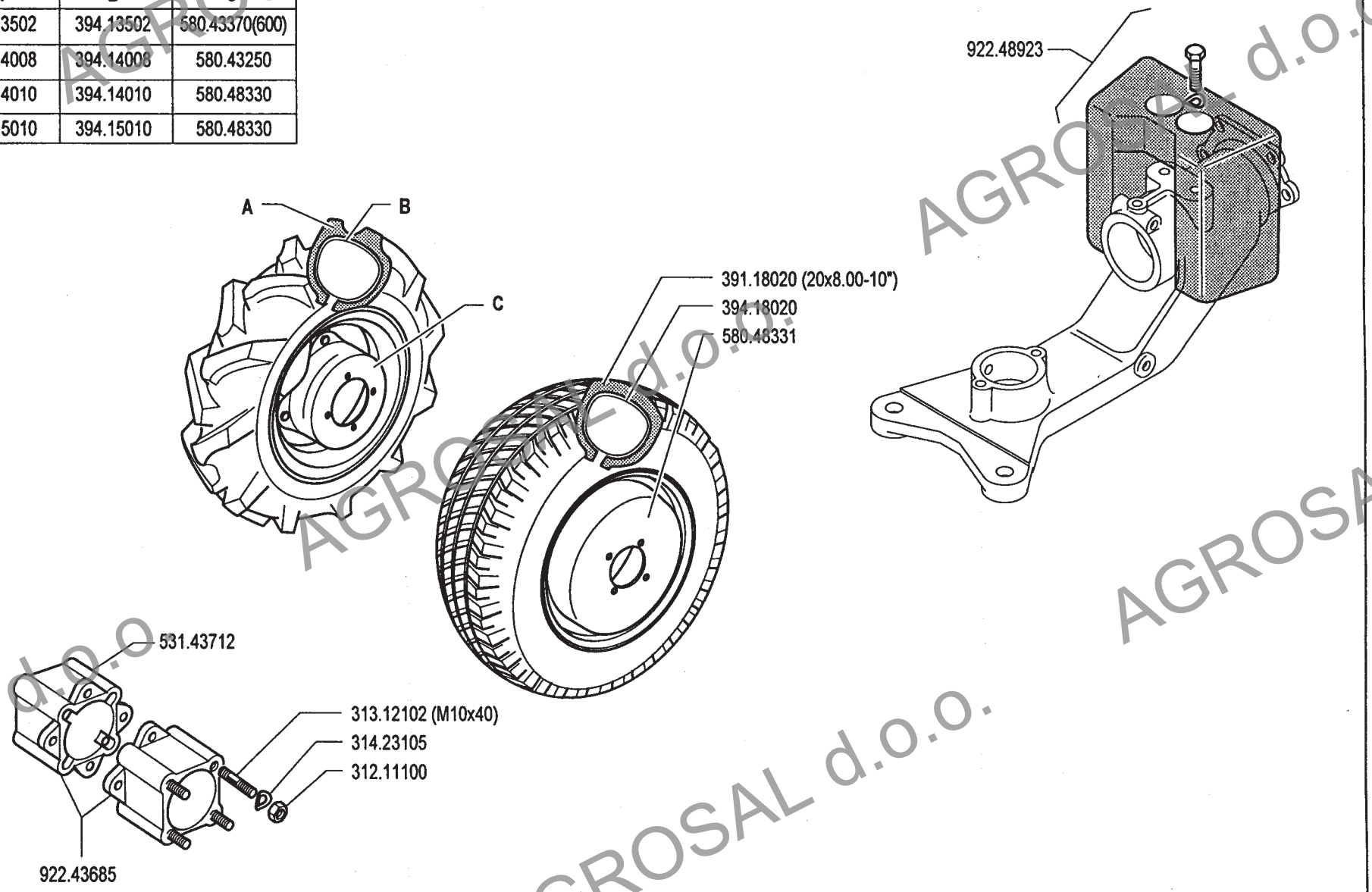

BCS 600 serie 94	RUOTE RUEDAS / WHEELS ROUES / RADER	DALLA MACCHINA DE LA MAQUINA DE LA MACHINE FROM THE MACHINE AB DER MASCHINE N.		11.00	02.05.1994

AGROSAL d.o.o.

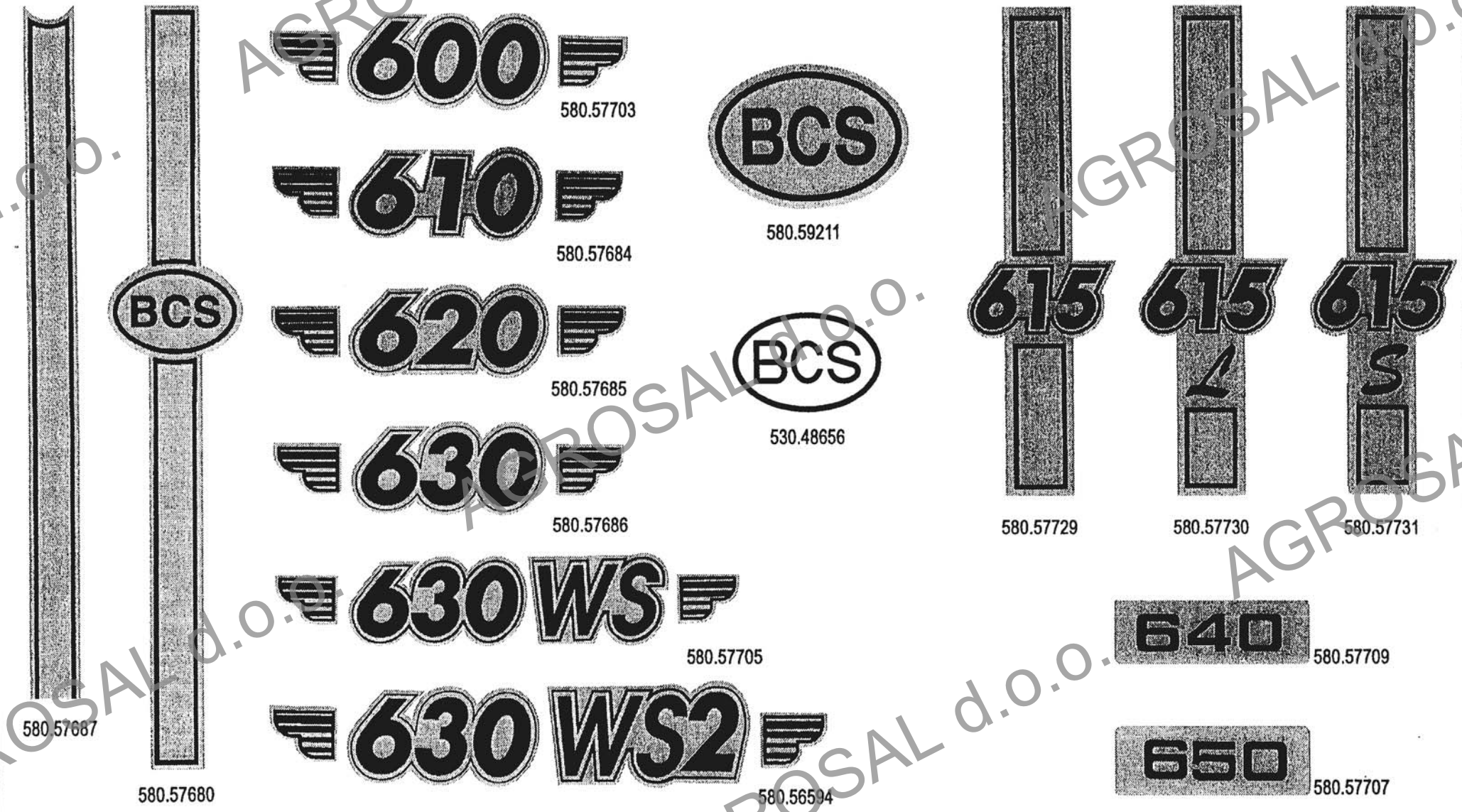

BCS	600 serie 94	ADESIVI STICKERS ADHESIVOS AUTOCOLLANTS AUFKLEBES	DALLA MACCHINA DE LA MAQUINA DE LA MACHINE FROM THE MACHINE AB DER MASCHINE ★N.	AGGIORNAMENTO REVISIÓN MISE A JOUR APLAZAMIENTO ANPASSUNG	12 7/1999	Mod. 01

AGROSAL d.o.o.

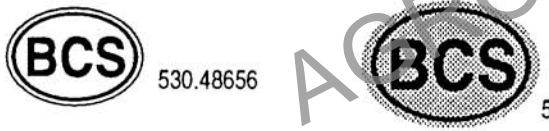

530.48656

580.59211

580.57703

580.57684

580.57685

580.57686

580.57705

580.57707

580.57709

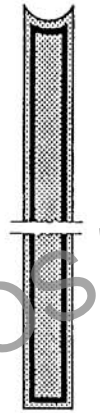
580.57687

580.46903

580.46912

580.46952

580.57678

580.57712

580.57714

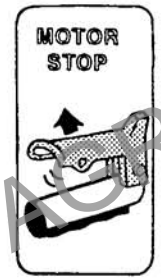

580.46902

580.46909

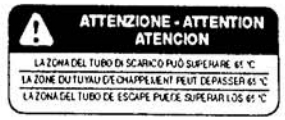

580.46910

580.57706

580.46953

580.57722

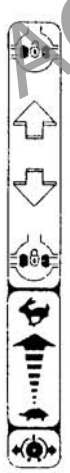
580.46913

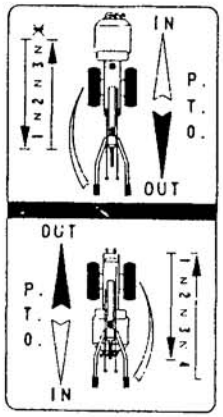

580.47731

580.57698

580.46901

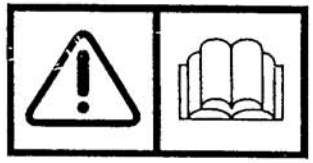
580.57724

BCS 600 serie 94	ADESIVI ADHESIVOS AUTOCOLLANTS STICKERS AUFKLEBES	DALLA MACCHINA DE LA MAQUINA DE LA MACHINE FROM THE MACHINE AB DER MASCHINE N.		12.00 9/1997

AGROSAL d.o.o.

580.57698

580.46913

580.57714

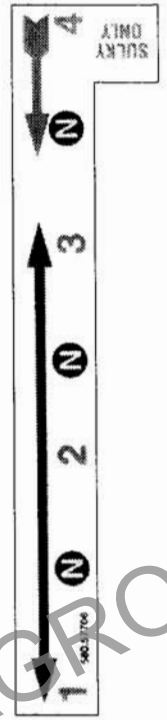

580.57706

580.57772 ★

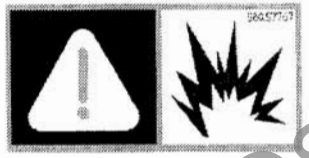

580.57767 ★

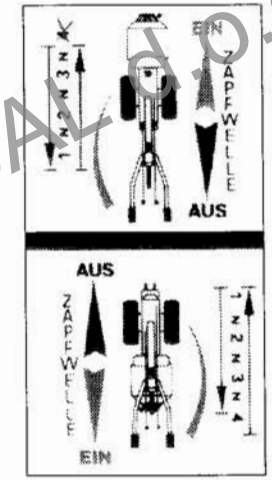

580.47731

580.57768 ★

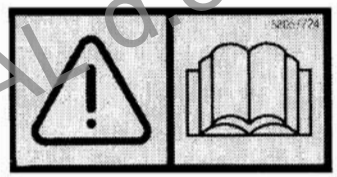

580.57724

580.57771 ★

580.57722

580.46912

580.57678

580.57712

580.57676

580.57770
KUPPLUNG
EMBRAYAGE
EMBRAGUE
CLUTCH
FRIZIONE

580.57770 ★

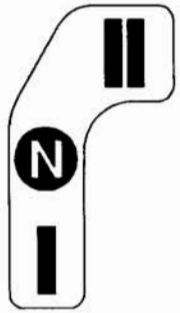

580.57732

BCS	600 serie 94	ADESIVI STICKERS ADHESIVOS AUTOCOLLANTS AUFKLEBES	DALLA MACCHINA DE LA MAQUINA DE LA MACHINE FROM THE MACHINE AB DER MASCHINE ★N.	AGGIORNAMENTO REVISION MISE A JOUR APLAZAMIENTO ANPASSUNG	13 12/2003	Rev. 1

AGROSAL d.o.o.

580.57698

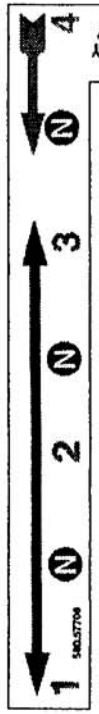

580.57706

580.57714

580.46913

580.57722

580.46901

580.46952

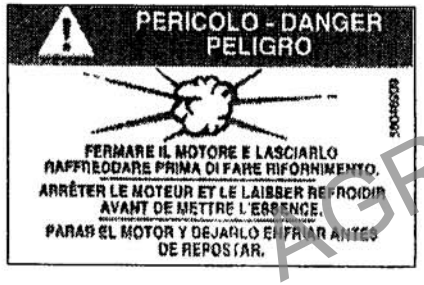

580.46909

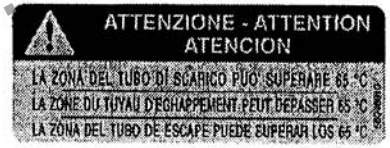

580.46910

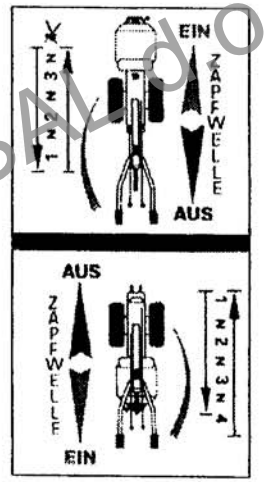

580.47731

580.46903

580.57678

580.57712

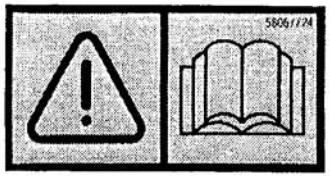

580.57724

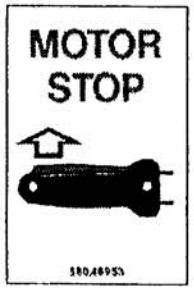

580.46953

580.46902

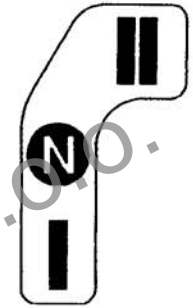

580.57732

580.57676

580.46912

BCS	600 serie 94	ADESIVI STICKERS ADHESIVOS AUTOCOLLANTS AUFKLEBES	DALLA MACCHINA DE LA MAQUINA DE LA MACHINE FROM THE MACHINE AB DER MASCHINE N.	13	Mod. 00
				7/1999	

AGROSAL d.o.o.