AGROSAL d.o.o.

BCS

730

AGROSAL d.o.o.
Gregorčičeva ulica 38, 5270 Ajdovščina
telefon: 05 368 90 96, fax: 05 368 90 97
e-mail: info@agrosal.si, www.agrosal.si

IT1	INDICE DELLE TAVOLE *INDEX OF TABLES* *REPERTOIRE DES PLANCHES* *INDICE DE FIGURAS* *TAFELVERZEICHNIS*
IT2	INDICE DELLE TAVOLE *INDEX OF TABLES* *REPERTOIRE DES PLANCHES* *INDICE DE FIGURAS* *TAFELVERZEICHNIS*
IC1	INDICE DEI CODICI *PART NUMBER INDEX* *INDEX DES REFERENCES* *INDICE DE LOS CODIGOS* *INDEX DER TEILNUMMERN*
IC2	INDICE DEI CODICI *PART NUMBER INDEX* *INDEX DES REFERENCES* *INDICE DE LOS CODIGOS* *INDEX DER TEILNUMMERN*
IC3	INDICE DEI CODICI *PART NUMBER INDEX* *INDEX DES REFERENCES* *INDICE DE LOS CODIGOS* *INDEX DER TEILNUMMERN*
IC4	INDICE DEI CODICI *PART NUMBER INDEX* *INDEX DES REFERENCES* *INDICE DE LOS CODIGOS* *INDEX DER TEILNUMMERN*
IC5	INDICE DEI CODICI *PART NUMBER INDEX* *INDEX DES REFERENCES* *INDICE DE LOS CODIGOS* *INDEX DER TEILNUMMERN*
IC6	INDICE DEI CODICI *PART NUMBER INDEX* *INDEX DES REFERENCES* *INDICE DE LOS CODIGOS* *INDEX DER TEILNUMMERN*
IC7	INDICE DEI CODICI *PART NUMBER INDEX* *INDEX DES REFERENCES* *INDICE DE LOS CODIGOS* *INDEX DER TEILNUMMERN*
IC8	INDICE DEI CODICI *PART NUMBER INDEX* *INDEX DES REFERENCES* *INDICE DE LOS CODIGOS* *INDEX DER TEILNUMMERN*
01	PROTEZIONI MOTORE (710-720-730) *ENGINE GUARDS* *PROTECTIONS MOTEUR* *PROTECCIONES MOTOR* *MOTOR SCHUTZ*
01A	PROTEZIONI MOTORE (740) *ENGINE GUARDS* *PROTECTIONS MOTEUR* *PROTECCIONES MOTOR* *MOTOR SCHUTZ*
01B	AVVIAMENTO ELETTRICO (740) *ELECTRIC STARTER* *DÉMARRAGE ÉLECTRIQUE* *ARRANQUE ELECTRICO* *ELEKTROSTART*
01C	PROTEZIONI MOTORE (746) *ENGINE GUARDS* *PROTECTIONS MOTEUR* *PROTECCIONES MOTOR* *MOTOR SCHUTZ*
01D	AVVIAMENTO ELETTRICO (746) *ELECTRIC STARTER* *DÉMARRAGE ÉLECTRIQUE* *ARRANQUE ELECTRICO* *ELEKTROSTART*
02	FRIZIONE A CONO AUTOVENTILANTE *CLUTCH* *EMBRAYAGE* *EMBRAGUE* *KUPPLUNG*
03	SCATOLA CAMBIO (710-720-730) *GEARBOX* *BOITE DE VITESSES* *CAJA DE CAMBIO* *WECHSELGETRIEBE*
03A	SCATOLA CAMBIO (740-746) *GEARBOX* *BOITE DE VITESSES* *CAJA DE CAMBIO* *WECHSELGETRIEBE*
04	INGRANAGGI CAMBIO (710) *GEARS* *ENGRANAGES* *ENGRANAJES* *ZAHNRÄDER*
05	INGRANAGGI CAMBIO (720-730) *GEARS* *ENGRANAGES* *ENGRANAJES* *ZAHNRÄDER*
05A	INGRANAGGI CAMBIO (740-746) *GEARS* *ENGRANAGES* *ENGRANAJES* *ZAHNRÄDER*
06	ASSE RUOTE (710-720) *WHEELS AXLE* *ESSIEU ROUES* *EJE RUEDAS* *RÄDACHSE*
07	DIFFERENZIALE (730) *DIFFERENTIAL* *DIFFÉRENTIEL* *DIFFERENCIAL* *DIFFERENTIAL*
07A	DIFFERENZIALE (740) *DIFFERENTIAL* *DIFFÉRENTIEL* *DIFFERENCIAL* *DIFFERENTIAL*
07B	DIFFERENZIALE (746) *DIFFERENTIAL* *DIFFÉRENTIEL* *DIFFERENCIAL* *DIFFERENTIAL*
08	PIANTONE (710-720-730) *STEERING COLUMN* *PLANTON* *COLUMNA* *LENKSÄULE*
08A	PIANTONE (740-746) *STEERING COLUMN* *PLANTON* *COLUMNA* *LENKSÄULE*
09	MANUBRIO (710) *HANDLEBAR* *MANCHERON* *MANILLAR* *LENKER*

AGROSAL d.o.o.

10	**MANUBRIO (720-730)** *HANDLEBAR* *MANCHERON* *MANILLAR* *LENKER*
10A	**MANUBRIO (740-746)** *HANDLEBAR* *MANCHERON* *MANILLAR* *LENKER*
11	**COMANDI (710)** *CONTROLS* *COMMANDES* *MANDOS* *ANTRIEBE*
12	**COMANDI (720-730)** *CONTROLS* *COMMANDES* *MANDOS* *ANTRIEBE*
13	**RUOTE** *WHEELS* *ROUES* *RUEDAS* *RÄDER*
13A	**FRENI (740-746)** *BRAKES* *FREINS* *FRENOS* *BREMSEN*
14	**ADESIVI** *STICKERS* *AUTOCOLLANTS* *ADHESIVOS* *AUFKLEBES*
15	**ADESIVI** *STICKERS* *AUTOCOLLANTS* *ADHESIVOS* *AUFKLEBES*

AGROSAL d.o.o.

codice	denominazione	tavola
F08.31193010	MOLLA DM.15X70	011/5 012/3
300.00001	INGRASSATORE M10	08A/3 08A/4
300.00021	MORSETTO PER FUNE 3/16"	01C/0
300.00276	CHIAVE INTERR 14109108 COBO	01B/0 01B/1 01B/2
300.00277	INTERR AVV 14.111.000.11 2/CH	01B/0 01B/1 01B/2
300.00295	LAMPADA 12V-5W-W2,1X9,5D	01D/0
300.00551	FUSIBILE 25A 6X25	01B/0 01D/0
300.00612	TASSELLI ESP.OTECO CP3516 M6	008/1 008/2 008/3 008/4
300.00628	PASSACAVO 90/200/30 SH50-55	001/0 001/1 001/2 008/0
		008/1 008/2
300.00629	PASSACAVO 80/110/30	001/0 001/1 001/2
300.10103	SIL/BL 10,2X30X45X60,5 SP.	009/0 009/1 009/2 009/3
300.10120	SIL/BL 12X40X58X66-47602	08A/0 08A/1 08A/2 08A/3
		08A/4
300.10112	SIL/BL 10,2X30X45X49 SP.	012/0 012/1 012/2 012/3
300.40001	TAPPO 1/4 UNI 364	003/0 003/1 003/2 003/3
		03A/0 03A/1 03A/2
300.40133	TAPPO 22 DIN 470 DA ZINCARE	003/0 003/1 003/2 003/3
311.00003	VITE TE 5/16X7/8 UNF 2A AC 8G	002/0 002/1 002/2 002/3
311.00015	VITE TE 3/8X1" UNC ACC.8G	002/2
311.00786	VITE STEI M8X30 UNI 5923 8G	002/0 002/1 002/2 002/3
311.00787	VITE STEI M8X35 UNI 5923 8G	002/0 002/1 002/2 002/3
311.11086	VITE TE M4X25 UNI 5739 8G	009/0 009/1 009/2 009/3
		010/0 010/1 010/2 010/3
		010/4 10A/0 10A/1 10A/2
		10A/3
311.11089	VITE TE M5X10 UNI 5739 8G	009/0 009/1
311.11090	VITE TE M6X10 UNI 5739 8G	003/0 003/1 003/2 003/3
		01C/0 03A/0 03A/1 03A/2
311.11091	VITE TE M6X14 UNI 5739 8G	01A/1 01A/2 01A/3 01D/0
		010/0 010/3 010/4 13A/1
311.11097	VITE TE M6X45 UNI 5737 8G	009/0 009/1 009/2 009/3
		010/0 010/1 010/2 010/3
		010/4 10A/0 10A/1 10A/2
		10A/3
311.11151	VITE TE M8X16 UNI 5739 8G	001/0 001/1 001/2 01A/0
		01A/2 01A/3 08A/0 08A/1
		08A/2 08A/3 08A/4
311.11217	VITE TE M10X75 UNI 5737 8G	012/0 012/1 012/2 012/3
311.11225	VITE TE M10X90 UNI 5737 8G	08A/0 08A/1 08A/2 08A/3
		08A/4
311.11229	VITE TE M10X110 UNI 5737 8G	008/0 008/1 008/2 008/3
		008/4
311.12089	VITE TE M6X25 UNI 5739 8G	009/0 009/1 009/2 009/3
		010/0 010/1 010/2 010/3
		010/4 10A/0 10A/1 10A/2
		10A/3
311.12090	VITE TE M6X16 UNI 5739 8G	010/2 05A/2 13A/0
311.12091	VITE TE M6X40 UNI 5739 8G	009/0 009/1
311.12092	VITE TE M6X35 UNI 5739 8G	010/0 010/1 010/2 010/3
		010/4 10A/0 10A/1 10A/2
		10A/3
311.12148	VITE TE M8X14 UNI 5739 8G ZNT	08A/0 08A/1 08A/2 08A/3
		08A/4
311.12149	VITE TE M8X12 UNI 5739 8G	08A/0 08A/1 08A/2 08A/3
		08A/4
311.12150	VITE TE M8X20 UNI 5739 8G	01A/0 01A/1 01A/2 011/0
		011/1 011/2 011/3 011/4
		011/5 03A/0 03A/1 03A/2
		07B/0
311.12152	VITE TE M8X30 UNI 5739 8G	007/0 012/0 012/1 012/2
		012/3 07A/0 07B/0
311.12153	VITE TE M8X35 UNI 5739 8G	008/2 008/3 008/4 009/0
		009/1 009/2 009/3 010/0
		010/1 010/2 010/3 010/4
		08A/0 08A/1 08A/2 10A/0
		10A/1 10A/2 10A/3
311.12154	VITE TE M8X40 UNI 5739 8G	001/1 001/2 01A/2 01A/3
		08A/3 08A/4

codice	denominazione	tavola
311.12156	VITE TE M8X60 UNI 5739 8G	001/0 001/1 001/2
311.12158	VITE TE M8X70 UNI 5737 8G	01C/0
311.12159	VITE TE M8X65 UNI 5737 8G	001/0
311.12164	VITE TE M8X75 UNI 5739 8G	008/0 008/1
311.12210	VITE TE M10X20 UNI 5739 8G	003/2 003/3 01C/0
311.12211	VITE TE M10X30 UNI 5739 8G	005/0 005/1 005/2 05A/0
		05A/1 05A/2
311.12217	VITE TE M10X80 UNI 5737 8G	008/0 008/1 008/2 008/3
		008/4 009/0 009/1 009/2
		009/3
311.12219	VITE TE M10X25 UNI 5739 8G	01C/0
311.12293	VITE TE M12X80 UNI 5737 8G	008/2 008/3 008/4
311.12294	VITE TE M12X85 UNI 5737 8G	008/0 008/1 008/2 008/3
		008/4
311.12295	VITE TE M12X90 UNI 5737 8G	08A/0 08A/1 08A/2 08A/3
		08A/4
311.21004	VITE TBCEI FLANG. M5X12 ZNT	001/0 001/1 001/2
311.21005	VITE TBCEI FLANG. M6X25 ZNT	001/0 001/1 001/2
311.21558	VITE TTQ M6X16 UNI 5731 5S ZNT	01A/2 01B/1 01B/2
311.32562	VITE TSVEI M6X16 UNI 5933	003/0 003/1 003/2 003/3
311.52057	VITE TCEI M6X16 UNI 5931 8G	01A/0
311.52085	VITE TCEI M8X25 UNI 5931 8G	13A/0 13A/1
311.52103	VITE TCEI M10X25 UNI 5931 8G	003/0 003/1 003/2 003/3
		007/0 03A/0 03A/1 03A/2
311.61043	VITE TC M4X30 UNI 6107 5S	01B/0 01B/1
312.01212	DADO M12 UNI 5593 6S ZB	011/0 011/1 011/2 011/3
		011/4 011/5
312.11040	DADO M4 UNI 5588 6S	009/0 009/1 009/2 009/3
		01B/0 01B/1 010/0 010/1
		010/2 010/3 010/4 10A/0
		10A/1 10A/2 10A/3
312.11050	DADO M5 UNI 5588 6S	009/0 009/1
312.11060	DADO M6 UNI 5588 6S	01B/0 01D/0 08A/0 08A/1
		08A/2 08A/3 08A/4
312.11080	DADO M8 UNI 5588 6S	001/0 001/1 001/2 002/0
		002/1 002/2 002/3 008/0
		008/1 008/2 009/0 009/1
		009/2 009/3 01A/0 01A/1
		01A/2 01A/3 010/0 010/1
		010/2 010/3 010/4 011/0
		011/1 011/2 10A/0 10A/1
		10A/2 10A/3
312.11100	DADO M10 UNI 5588 6S	006/0 007/0 013/0 013/1
		013/2 03A/0 03A/1 03A/2
		07A/0 07B/0
312.21121	DADO M12X1,25 UNI 5587 6S	003/0 003/1 003/2 003/3
		03A/0 03A/1 03A/2
312.31080	DADO M8 UNI 5589 6S	010/0 010/1 010/2 010/3
		010/4
312.41052	DADO AUTOBL M5 FLANG DEFORM	001/0 001/1 001/2
312.41060	DADO AUTOBL M6 ALTO DIN 982	009/0 009/1 009/2 009/3
		01A/0 01A/1 01A/2 01B/0
		01B/1 01B/2 01D/0 010/0
		010/1 010/2 010/3 010/4
		10A/0 10A/1 10A/2 10A/3
312.41080	DADO AUTOBL M8	001/0 001/1 001/2 003/0
		003/1 003/2 003/3 007/0
		008/0 008/1 008/2 008/3
		008/4 009/2 009/3 01A/2
		01A/3 01B/1 01B/2 01C/0
		010/0 010/1 010/2 010/3
		010/4 011/0 011/1 011/2
		011/3 011/4 011/5 012/0
		012/1 012/2 012/3 03A/0
		03A/1 03A/2 07A/0 07B/0
		08A/0 08A/1 08A/2 08A/3
		08A/4 13A/1
312.41083	DADO AUTOBL M8 FLANG NORM	009/0 009/1
312.41085	DADO AUTOBL M8 6S DEFORM	003/0 003/1 003/2 003/3

AGROSAL d.o.o.

codice	denominazione	tavola
		011/0 011/1 011/2 011/3
		011/4 011/5 012/0 012/1
		012/2 012/3 03A/0 03A/1
		03A/2
312.41100	DADO AUTOBL M10	008/0 008/1 008/2 008/3
		008/4 009/0 009/1 009/2
		009/3 012/0 012/1 012/2
		012/3
312.41101	DADO AUTOBL M10 BASSO	08A/0 08A/1 08A/2 08A/3
		08A/4
312.41120	DADO AUTOBL M12	006/0 008/0 008/1 008/2
		008/3 008/4
312.41121	DADO AUTOBL M12 BASSO	08A/0 08A/1 08A/2 08A/3
		08A/4
312.41124	DADO AUTOBL M12x1,25 DEFORM	03A/2
312.41126	DADO AUTOBL M12 DEFORM	008/2 008/3 008/4
313.12080	PRIG M8X46X20X12 8G	007/0 07A/0
313.12082	PRIG M8X38X14X20 8G	003/0 003/1 003/2 003/3
		011/0 011/1 011/2 011/3
		011/4 011/5 012/0 012/1
		012/2 012/3 03A/0 03A/1
		03A/2
313.12083	PRIG M8X46X16X16 8G	002/0 002/1 002/2 002/3
313.12084	PRIG M8X58X16X16 8G	003/0 03A/0 03A/1 03A/2
313.12085	PRIG M8X80X28X16 8G	07B/0
313.12086	PRIG M8X56X20X14 8G	003/1 003/2 003/3
313.12088	PRIG M8X40X14X14 8G	002/0 002/1 002/2 002/3
313.12089	PRIG M8X52X14X18 8G	07B/0
313.12094	PRIG M8X68X14X36 8G	003/0 003/1 003/2 003/3
		03A/0 03A/1 03A/2
313.12101	PRIG M10X37X15X19 8G	03A/0 03A/1 03A/2
313.12102	PRIG M10X40X24X12 8G	006/0 007/0 013/0 013/1
		07A/0 07B/0
313.12103	PRIG M10X46X24X16 8G	013/2
313.12124	PR.52XM12X1,25X22XM12X22 8G	003/0 003/1 003/2 003/3
		03A/1 03A/2
313.12125	PR.64XM12X1,25X26XM12X30 8G	003/1 003/2 003/3 03A/0
		03A/1 03A/2
314.11043	ROSETTA 4,3X9 UNI 6592	009/0 009/1 009/2 009/3
		010/0 010/1 010/2 010/3
		010/4 10A/0 10A/1 10A/2
		10A/3
314.11064	ROSETTA 6,4x12,5 UNI 6592	008/1 008/2 008/3 008/4
		009/1 009/2 009/3 01A/2
		01B/0 01C/0 010/1 010/2
		010/3 010/4 10A/0 10A/1
		10A/2 10A/3
314.11084	ROSETTA 8,4x17 UNI 6592	001/0 001/1 001/2 007/0
		01A/2 01A/3 010/0 010/1
		010/2 010/3 010/4 07A/0
		07B/0 08A/0 08A/1 08A/2
		08A/3 08A/4 10A/0 10A/1
		10A/2 10A/3 13A/1
314.11104	ROSETTA 10,5x18 UNI 6592	001/0 001/1 001/2 01A/1
		01A/2 01A/3 011/0 011/1
		011/2 011/3 011/4 011/5
		012/0 012/1 012/2 012/3
		08A/0 08A/1 08A/2 08A/3
		08A/4
314.11105	ROSETTA 10,5x21 UNI 6592	01A/0 01C/0
314.11130	ROSETTA 13x24 UNI 6592	009/0 009/1
314.13043	ROSETTA 4,3 UNI 1739 ACC	01C/0
314.14130	ROSETTA 13 UNI 1749 ACC.	011/5 012/3 08A/3 08A/4
314.21083	SUPER RANELLA 8 DIN 6796 ZNT	003/0 003/1 003/2 003/3
		01A/0 01A/1 01A/2 01B/1
		01B/2 01C/0 011/0 011/1
		011/2 011/3 011/4 011/5
		012/0 012/1 012/2 012/3
		03A/0 03A/1 03A/2 08A/0

codice	denominazione	tavola
		08A/1 08A/2 08A/3 08A/4
314.21100	MOLLA TZ 25X12,2X1,5 D2093 GRZ	008/2 008/3 008/4
314.21101	SUPER RANELLA 10 DIN 6796 ZNT	003/2 003/3 005/0 005/1
		005/2 05A/0 05A/1 05A/2
314.21130	SUPER RANELLA 12 DIN 6796 ZNT	006/0 008/0 008/1 008/2
314.21132	ROSETTA CONICA 13X24X2,8 ACC.	003/3 011/5 03A/2
314.22064	ROSETTA EL 6,4 DIN 137-A	003/0 003/1 003/2 003/3
		009/0 009/1 01A/0 01A/1
		01A/2 01A/3 03A/0 03A/1
		03A/2 10A/0 10A/1 10A/2
		10A/3
314.23043	ROSETTA EL 4,3 DIN 137-B ACC	009/0 009/1 009/2 009/3
		01B/0 01B/1 010/0 010/1
		010/2 010/3 010/4 10A/0
		10A/1 10A/2 10A/3
314.23084	ROSETTA EL 8,4 DIN 137-B	001/0 001/1 001/2 002/0
		002/1 002/2 002/3 003/0
		003/1 003/2 003/3 007/0
		008/0 008/1 008/2 008/3
		008/4 009/0 009/1 009/2
		009/3 01A/0 01A/1 01A/2
		01A/3 010/0 010/1 010/2
		010/3 010/4 011/3 011/4
		011/5 012/0 012/1 012/2
		012/3 03A/0 03A/1 03A/2
		07A/0 07B/0 08A/0 08A/1
		08A/2 08A/3 08A/4 10A/0
		10A/1 10A/2 10A/3
314.23105	ROSETTA EL 10,5 DIN 137-B	002/2 006/0 007/0 008/0
		008/1 008/2 008/3 008/4
		009/0 009/1 009/2 009/3
		01C/0 013/0 013/1 013/2
		03A/0 03A/1 03A/2 07A/0
		07B/0 08A/0 08A/1 08A/2
		08A/3 08A/4
314.23130	ROSETTA EL 13 DIN 137-B	003/0 003/1 003/2 008/3
		008/4 011/0 011/1 011/2
		011/3 011/4 03A/0 03A/1
		08A/0 08A/1 08A/2 08A/3
		08A/4
314.40004	ROSETTA ELASTICA PERNI D4	08A/0 08A/1 08A/2 08A/3
		08A/4
315.10098	VITE A/F 6,3X16 UNI 6950 B	01A/0 01A/1
315.10099	VITE A/F 6,3X38 UNI 6950 AB	001/0 001/1 001/2 01A/0
315.10100	VITE A/F TE M6,3X19 UNI 6950/B	01A/1 01A/2 01A/3
315.10640	VITE A/F 6,3X32 UNI 6950 B	01A/1
333.12500	RIVETTO A STRAPPO 3,8X16 ALL.	01C/0
341.10028	COPIGLIA A3,0X15 UNI 1336 ZINC	011/0 011/1 011/2 011/3
		011/4 011/5 012/0 012/1
		012/2 012/3 08A/0 08A/1
		08A/2 08A/3 08A/4
341.10030	COPIGLIA A3,0X20 UNI 1336 ZINC	001/0 001/1 001/2 01A/0
		01A/1 01A/2 01A/3 01C/0
342.11025	SPINA ELAST.2,5X22 DIN 1481	004/0 004/1 004/2
342.11028	SPINA ELAST.3,0X18 DIN 1481	008/0 008/1 008/2 008/3
		008/4
342.11041	SPINA ELAST.4X35 DIN 1481	008/0 008/1 008/2 008/3
		008/4
342.11042	SPINA ELAST.4X25 DIN 1481	005/0 005/1 005/2 05A/0
		05A/1 05A/2
342.11084	SPINA ELAST.8X40 DIN 1481	008/0 008/1
342.13020	SPINA ELAST.4X20 SPIROL 6876	010/0 010/1 010/2 010/3
		010/4 011/0 011/1 011/2
		011/3 011/4 011/5 012/0
		012/1 012/2 012/3 08A/0
		08A/1 08A/2 08A/3 08A/4
		10A/0 10A/1 10A/2 10A/3
342.13022	SPINA ELAST.3,0X22 SPIROL 6876	011/0 011/1 011/2 011/3
		011/4 011/5 012/0 012/1

AGROSAL d.o.o.

codice	denominazione	tavola
		012/2 012/3 08A/0 08A/1
		08A/2 08A/3 08A/4
342.13024	SPINA ELAST.4X24 SPIROL 6876	011/0 011/1 011/2 011/3
		011/4 011/5 012/0 012/1
		012/2 012/3 08A/0 08A/1
		08A/2 08A/3 08A/4
342.13040	SPINA ELAST.4X45 SPIROL 6875	07B/0
342.13060	SPINA ELAST.6X24 SPIROL 6876	004/0 004/1 004/2 005/0
		005/1 005/2 05A/0 05A/1
		05A/2
342.13061	SPINA ELAST.6X20 SPIROL 6876	004/0 004/1 004/2 005/0
		005/1 005/2 011/0 011/1
		011/2 011/3 011/4 011/5
		05A/0 05A/1 05A/2
342.21070	SPINA CILIND 8X50 UNI 1707 C30	008/0 008/1 008/2 008/3
		008/4
343.11060	LINGUETTA 6X10 UNI 6606	006/0
351.11047	ANELLO SEEGER I 47 DIN 472	007/0 05A/2 07A/0
351.11052	ANELLO SEEGER I 52 DIN 472	004/0 004/1 004/2 005/0
		005/1 005/2 006/0
351.11053	ANELLO SEEGER I 52 UNI 7438	05A/0 05A/1 05A/2
351.11055	ANELLO SEEGER I 55 DIN 472	004/0 004/1 004/2 005/0
		005/1 005/2 05A/0 05A/1
		05A/2
351.21031	ANELLO SEEGER E 30 UNI 7436	004/0 004/1 004/2 005/0
		005/1 005/2 05A/0 05A/1
		05A/2
352.11120	ANELLO SEEGER E 12 UNI 7434	004/0 004/1 004/2 005/0
		005/1 005/2 05A/0 05A/1
		05A/2
371.11150	CUSCIN. 6202 (15X35X11)	004/0 004/1 004/2 005/0
		005/1 005/2 05A/0 05A/1
		05A/2
371.11152	CUSCIN. 6302 (15X42X13) SKF	004/0 004/1 004/2 005/0
		005/1 005/2 05A/0 05A/1
		05A/2
371.11170	CUSCIN. 6203 (17X40X12)	07B/0
371.11202	CUSCIN. 6304 (20X52X15)	007/0
371.11250	CUSCIN. 6205 (25X52X15)	004/0 004/1 004/2 005/0
		005/1 005/2 006/0 07A/0
		07B/0
371.11253	CUSCIN. 6005 (25X47X12)	007/0 07A/0
371.12173	CUSCIN. 6203-2RS C3 WT SKF	002/0 002/1 002/2 002/3
371.12229	CUSCIN. 6006 (30X55X13) SKF	004/0 004/1 004/2 005/0
		005/1 005/2 05A/0 05A/1
		05A/2
371.12231	CUSCIN. 6204-2RS1 C3 SKF	002/0 002/1 002/2 002/3
371.12233	CUSCIN. 6006-2RS1 C3 SKF	002/2
371.12252	CUSCIN. 6005-2RS (25X47X12)	05A/2
371.12253	CUSCIN. 6205-RS (DA 37112250)	07B/0
371.41250	CUSCIN. 7205-B OBL SKF	05A/0 05A/1 05A/2
373.20120	GABBIA R/NI K 12X15/10 H	004/0 004/1 004/2 005/0
		005/1 005/2 05A/0 05A/1
		05A/2
379.10832	SFERA 1/4 GRADO C	004/0 004/1 004/2 005/0
		005/1 005/2 009/0 009/1
		05A/0 05A/1 05A/2
379.11532	SFERA 15/32 GRADO C	011/0 011/1 011/2 011/3
		011/4 011/5 012/0 012/1
		012/2 012/3 08A/0 08A/1
		08A/2 08A/3 08A/4
381.11191	ANELLO OR 115 (11,91X2,62)	011/5 012/3 08A/3 08A/4
381.11400	ANELLO OR 2056 (14,00X1,78)	007/0 07A/0 07B/0
381.12817	ANELLO OR 4112 (28,17X3,53)	08A/0 08A/1 08A/2 08A/3
		08A/4
382.02502	PARAOLIO 14X18X3/A-DH1	011/0 011/1 012/0
382.11400	PARAOLIO 14X22X4	011/0 011/1 011/2 011/3
		011/4 011/5 012/0 012/1
		012/2 012/3 08A/0 08A/1

codice	denominazione	tavola
		08A/2 08A/3 08A/4
382.11500	PARAOLIO 15X28X6	004/2 005/1 005/2 03A/0
		03A/1 03A/2
382.11501	PARAOLIO 15X40X10	004/0 004/1 005/0
382.12501	PARAOLIO 25X52X10	006/0
382.13002	PARAOLIO 30X40X7	007/0 07A/0
382.13003	PARAOLIO 30X47X7	07B/0
382.13800	PARAOLIO 38X55X7	004/0 004/1 004/2 005/0
		005/1 005/2 05A/0 05A/1
		05A/2
391.13502	PN 3.50-8 2PR TRAC-SAVAK	013/0 013/1 013/2
391.14008	PN 4.00-8 2PR TM	013/0 013/1 013/2
391.14010	PN 4.0-10 2PR TM	013/0 013/1 013/2
391.15010	PN 5.0(5.00)-10 2PR TM	013/1 013/2
391.15012	PN 5.00-12 2PR IM110	013/0 013/1 013/2
391.16018	PN 6.5/80-12 2PR TM	013/1 013/2
391.16020	PN 6.5/80-15 2PR TM	013/2
394.13502	C/D'ARIA 8C220 PER 3.50-8	013/0 013/1 013/2
394.14008	C/D'ARIA 8C220 PER 4.00-8	013/0 013/1 013/2
394.14010	C/D'ARIA 10C250 PER 4.0-10	013/0 013/1 013/2
394.15010	C/D'ARIA 10C290 PER 5.0-10	013/1 013/2
394.15012	C/D'ARIA 12L300	013/0 013/1 013/2
394.16018	C/D'ARIA 12C300 PER 6-5/80-12	013/1 013/2
394.16020	C/D'ARIA 15T340 PER 6.5/80-15	013/2
509.47833	LEVA FRIZIONE CORTA	002/0 002/1 002/2 002/3
509.56262	LEVA FRIZIONE AE	002/2 002/3
513.59229	CORPO PROL.MM 80 3 FORI BLU	03A/1 03A/2
521.56917	CUNEO	008/2 008/3 008/4
523.57250	PERNO PRESA DI FORZA	011/0 011/1 011/2 011/3
		011/4 011/5 012/0 012/1
		012/2 012/3 08A/0 08A/1
		08A/2 08A/3 08A/4
524.43852	SEMIASSE LUNGO DESTRO	007/0
524.43853	SEMIASSE CORTO SINISTRO	007/0
524.47896	SPINGICONO	002/0 002/1 002/2 002/3
524.48182	INNESTO MAGGIORATO	007/0
524.48187	SEMIASSE CORTO D25 SINISTRO	07A/0
524.48188	SEMIASSE LUNGO D25 DESTRO	07A/0
524.49640	ALBERO RIDUTTORE D25 LUNGO DX	07B/0
524.49641	INGRANAGGIO RIDUTTORE	07B/0
524.49642	ALBERO RIDUTTORE D25 CORTO SX	07B/0
524.49643	SEMIASSE 745	07B/0
524.56335	ALBERO PRESA DI FORZA	004/0 004/1 004/2 005/0
		005/1 005/2
524.56336	ALBERO PRESA DI FORZA	05A/0 05A/1 05A/2
524.56339	ALBERO FRIZIONE	004/0 004/1 004/2 005/0
		005/1 005/2
524.56340	ALBERO FRIZIONE	05A/0 05A/1 05A/2
524.56344	SUPPORTO INGRANAGGIO R/MARCIA	005/0 005/1 05A/0 05A/1
		05A/2
524.56349	SUPPORTO INGRANAGGIO R/MARCIA	005/2
524.56354	INGRANAGGIO I VELOCITA'	004/0 004/1 004/2 005/0
		005/1 005/2 05A/0 05A/1
		05A/2
524.56356	SCORREVOLE MARCE 1+1	004/1 004/2
524.56357	SCORREVOLE MARCE mr	004/0
524.56358	SCORREVOLE MARCE	005/0
524.56359	SCORREVOLE MARCE	05A/0
524.56360	SCORREVOLE MARCE 4+3	05A/1 05A/2
524.56361	SCORREVOLE MARCE 3+2	005/1 005/2
524.56362	INNESTO PRESA DI FORZA	004/0 004/1 004/2 005/0
		005/1 005/2 05A/0 05A/1
		05A/2
524.56370	SCORREVOLE INVERTITORE	005/0 005/1 005/2 05A/0
		05A/1 05A/2
524.56389	LEVA SCORREVOLE MARCE	004/0 004/1 004/2 005/0
		005/1 005/2 05A/0 05A/1
		05A/2
524.56390	LEVA SCORREVOLE PRESA DI FORZA	004/0 004/1 004/2 005/0

AGROSAL d.o.o.

codice	denominazione	tavola
		005/1 005/2 05A/0 05A/1
		05A/2
524.57866	ALBERO PROLUNGA MM80 3DNT	05A/2
530.48656	MARCHIO OVALE	01A/0 01C/0 014/0 015/0
		015/1 08A/0 08A/1 08A/2
		08A/3 08A/4
531.43128	COPERCHIO SUP CON FORO M10	003/0 003/1 003/2 003/3
531.43712	DISTANZIALE RUOTA	013/0 013/1 013/2
531.43875	COPERCHIO SCAT.CAMBIO DIFFER.P	003/0 003/1 003/2 003/3
		03A/0 03A/1 03A/2
531.47482	FLANGIA MOTORE VANG 12.5CV mr	002/2
531.56325	CORPO SCATOLA	003/0 003/1 003/2 003/3
531.56326	CORPO SCATOLA LUNGA	03A/0 03A/1 03A/2
531.56332	COPERCHIO POSTERIORE	003/0 003/1 003/2 003/3
		03A/0 03A/1 03A/2
531.56342	SUPPORTO INGRANAGGIO R/MARCIA	003/1 003/2 003/3
531.56343	SUPPORTO INGRANAGGIO R/MARCIA	003/0
531.56345	COPERCHIO POSTERIORE PER 746	03A/1 03A/2
531.56346	CORPO SCATOLA DIFFERENZIALE	003/2 003/3
532.43851	MOZZO PER SEMIASSE	007/0 07A/0
532.47468	FLANGIA H21 PER MOTORI 5HP	002/0 002/1 002/2 002/3
532.49635	SCATOLA RIDUTTORE	07B/0
541.43090	CORONA Z=49 DESTRORSA MC	006/0
551.02678	ANELLO GOMMA	003/0 003/1 003/2 003/3
		03A/0 03A/1 03A/2
551.02714	MANOPOLA PIATTA	008/0 008/1 008/2 008/3
		008/4 08A/0 08A/1 08A/2
		08A/3 08A/4
551.42076	POMOLO	011/0 011/1 011/2 011/3
		011/4 011/5 012/0 012/1
		012/2 012/3 08A/0 08A/1
		08A/2 08A/3 08A/4
551.42109	BOCCOLA	001/0 001/1 001/2 01A/0
		01A/1 01A/2 01A/3 01C/0
551.47842	SOFFIETTO (PER LEVA FRIZ.AUT.)	002/0 002/1 002/2 002/3
551.57609	SOFFIETTO	002/2 002/3
552.42528	SNODO D10	011/1 011/2 011/3 011/4
		011/5
552.43340	SUPPORTO ASTA COMANDI TAGLIATO	008/0 008/1 008/2 008/3
		008/4 009/0 009/1 009/2
		009/3 08A/0 08A/1 08A/2
		08A/3 08A/4
552.47636	CRUSCOTTO PIANTONE	08A/0 08A/1 08A/2 08A/3
		08A/4
552.47644	SNODO CAMBIO MC	08A/0 08A/1 08A/2 08A/3
		08A/4
552.48036	LEVA MOTORSTOP	009/0 010/0
552.48038	CONTRASTO MOT/STOP	010/0 010/1 010/2 010/3
		010/4 10A/0 10A/1 10A/2
		10A/3
552.48041	LEVA MOTORSTOP SENZA BCS	009/1 009/2 009/3 010/1
		010/2 010/3 010/4 10A/0
		10A/1 10A/2 10A/3
552.48072	POMOLO LEVA RIDUTTORE	08A/0 08A/1 08A/2 08A/3
		08A/4
552.48241	TAPPO D25	01A/0 01A/1 01A/2
552.48283	LEVA COMANDO INVERTITORE	010/0 010/1 010/2 010/3
		010/4 10A/0 10A/1 10A/2
		10A/3
552.48284	LEVA BLOCCAGGIO DIFF	010/0 010/1 010/2 010/3
		010/4 10A/0 10A/1 10A/2
		10A/3
552.48378	ANELLO CONTRASTO PDF	011/0 011/1 011/2
552.48379	SNODO P.D.F.	011/0 011/1 011/2 011/3
		011/4 011/5 012/0 012/1
		012/2 012/3 08A/0 08A/1
		08A/2 08A/3 08A/4
552.49668	PASSANTE X GUAINE	008/2 008/3 008/4
552.50305	ACCELERATORE	009/0 009/1

codice	denominazione	tavola
552.50310	LEVA COMANDO GAS COMPLETA	009/0 009/1
552.51686	SUPPORTO LEVA	008/0 008/1 008/2 008/3
		008/4
552.51688	LEVA DI REGOLAZIONE	008/0 008/1 008/2 008/3
		008/4
552.57249	SNODO CAMBIO 3+2	012/0 012/1 012/2 012/3
552.57255	CONTRASTO PDF 3+2	012/0 012/1 08A/0
552.57313	RULLO LEVA INVERTITORE	011/3 011/4 011/5 012/2
		012/3 08A/1 08A/2 08A/3
		08A/4
552.57321	CONTRASTO PDF MC	011/3 011/4 011/5 012/2
		012/3 08A/1 08A/2 08A/3
		08A/4
552.57540	CRUSCOTTO	001/0 001/1 001/2
561.19937	SUPPORTO BATTERIA	01B/0
561.37370	FERMABATTERIA	01B/0 01B/1 01B/2 01D/0
561.42110	PERNO PER ATTACCO	01A/0 01A/1 01C/0
561.42828	FASCETTA MOTORE	01D/0
561.43059	DISTANZIALE	006/0
561.43360	ASTA COMANDO	011/0 011/1 011/2 011/3
		012/0
561.43794	ATTACCO SUPERIORE X IM 300	01A/0
561.43865	ANELLO PER SEMIASSE	007/0
561.43878	STAFFA CONTRASTO FRIZIONE	03A/0 03A/1 03A/2
561.43880	LEVETTA DI SGANCIO	007/0 07A/0 07B/0
561.43883	CONTRASTO GUAINA DIFFERENZIALE	007/0 07A/0 07B/0
561.47432	SOSTEGNO TAMPONI 1IM350	01A/0
561.47433	SUPPORTO TAMPONI AT330	01A/0 01A/1
561.47434	SUPPORTO TAMPONI 6LD360/400	01A/0 01A/1
561.47437	DISTANZIALE	01A/0 01A/1
561.47499	PROTEZ.COLLETTORE DI SCARICO	01C/0
561.47520	COPERCHIO LATERALE SCATOLA	003/0 003/1 003/2 003/3
		03A/0 03A/1 03A/2
561.47560	CONTRASTO LEVA R/MARCIA	08A/0 08A/1 08A/2 08A/3
		08A/4
561.47574	BLOCCHETTO INVERTIT	08A/0 08A/1 08A/2 08A/3
		08A/4
561.47641	CAVALLOTTO MANUBRIO	08A/0 08A/1 08A/2 08A/3
		08A/4
561.47646	ASTA COMANDO MARCE	08A/0 08A/1 08A/2 08A/3
		08A/4
561.47648	ASTA COMANDO PRESA DI FORZA	08A/0 08A/1 08A/2 08A/3
		08A/4
561.47655	LEVA FRIZIONE A DISCHI	009/0 009/1 009/2 009/3
		010/0 010/1 010/2 010/3
		010/4 10A/0 10A/1 10A/2
		10A/3
561.47664	INGRANAGGIO INVERSIONE Z-12	08A/0 08A/1 08A/2 08A/3
		08A/4
561.47672	PERNO DI GUIDA	08A/0 08A/1 08A/2 08A/3
		08A/4
561.47703	INGRANAGGIO INVERSORE PIEG.	08A/0 08A/1 08A/2 08A/3
		08A/4
561.47711	PERNO RITEGNO MOLLA M/S	009/0 009/1 009/2 009/3
		010/0 010/1 010/2 010/3
		010/4 10A/0 10A/1 10A/2
		10A/3
561.47845	LEVA FRIZIONE AUTOVENTILANTE	002/0 002/1 002/2 002/3
561.47923	STAFFA DI CONTRASTO LUNGA	003/0 003/1 003/2 003/3
		007/0 03A/0 03A/1 03A/2
561.48031	SUPPORTO TAMP.COF.ALN330 BCS	01A/0 01A/1
561.48037	FERMO LEVA MOT/STOP	009/0 009/1 009/2 009/3
		010/0 010/1 010/2 010/3
		010/4 10A/0 10A/1 10A/2
		10A/3
561.48184	ANELLO SEMIASSE	07A/0
561.48218	TAMBURO FRENO .D 136.	13A/0 13A/1
561.48285	PERNO	010/0 010/1 010/2 010/3
		010/4 10A/0 10A/1 10A/2

AGROSAL d.o.o.

codice	denominazione	tavola
		10A/3
561.48286	PERNO FORATO	010/0 010/1 010/2 010/3
		010/4 10A/0
561.48287	PERNO FILETTATO	010/0 010/1 010/2 010/3
		010/4 10A/0 10A/1 10A/2
		10A/3
561.48470	LEVA	10A/0 10A/1 10A/2 10A/3
561.48672	PIASTRINA DI CONTRASTO	01C/0
561.49590	FERMABATTERIA L=200	01B/0 01B/1 01B/2 01D/0
561.49644	DISTANZIALE	07B/0
561.49645	COPERCHIO	07B/0
561.49655	ASTA DI COMANDO	011/0 011/1 011/2
561.50358	PIASTRINA	009/0 009/1
561.50361	DISTANZIALE LEVE	009/0 009/1 009/2 009/3
		010/0 010/1 010/2 010/3
		010/4 10A/0 10A/1 10A/2
		10A/3
561.52242	SUPPORTO TAMPONI IM359	01A/2 01A/3
561.56081	PIASTRINA PARAURTI 3LD	01C/0
561.56152	PROTEZ.MARMITTA VANGUARD 14HP	01C/0
561.56940	CAVALLOTTO MANUBRIO 27.003	008/0 008/1 008/2 008/3
		008/4
561.56948	CONTRASTO MOLLA PIANTONE	008/4
561.56968	FERMO LEVA SBLOCC.MANUBRIO	08A/3 08A/4
561.57234	SELETTORE MARCE 1+1	011/0 011/1 011/2 011/3
		011/4 011/5
561.57236	SELETTORE MARCE (3+2)	012/0 012/1 012/2 012/3
561.57239	SELETTORE MARCE	08A/0 08A/1 08A/2 08A/3
		08A/4
561.57245	FERMO LEVA COMANDO CAMBIO	008/0 008/1 008/2
561.57248	LEVA COMANDO CAMBIO	012/0 012/1 012/2 012/3
561.57257	DISTANZIALE PER LEVA	012/0 012/1 012/2 012/3
561.57258	DISTANZIALE ASTA DI COMANDO	008/0 008/1
561.57260	LEVA PRESA DI FORZA	011/0 011/1 011/2 012/0
		012/1
561.57267	LEVA PRESA DI FORZA LUNGA	08A/0
561.57271	LEVA COMANDO CAMBIO CORTA	011/0 011/1 011/2 011/3
		011/4 011/5 08A/0 08A/1
		08A/2 08A/3 08A/4
561.57274	SQUADRETTA	012/0 012/1 012/2 012/3
561.57275	ASTA DI COMANDO	012/0
561.57282	ASTA PDF MC 710/720 CON AE	011/3 011/4 011/5
561.57283	ASTA CAMBIO 710AE	011/4 011/5
561.57303	DISTANZIALE PER LEVA	08A/0 08A/1 08A/2 08A/3
		08A/4
561.57311	ASTA CAMBIO MC CON CARROZZERIA	012/1 012/2 012/3
561.57312	ASTA PDF MC C/CARROZZERIA	012/1 012/2 012/3
561.57323	LEVA PRESA DI FORZA CORTA	011/3 011/4 011/5
561.57324	LEVA PRESA DI FORZA LUNGA	012/2 012/3 08A/1 08A/2
		08A/3 08A/4
561.57332	CAVALLOTTO	010/2 010/3 010/4 10A/1
		10A/2 10A/3
561.57539	PERNO X ATTACCO	001/0 001/1 001/2 01A/2
		01A/3
561.57555	TUBETTO D.9X1,25	001/0 001/1 001/2
561.57589	SUPPORTO TAMPONI X IM 359/REST	01A/1
561.57590	CERNIERA COFANO	001/1 001/2 01A/2 01A/3
561.57603	SOSTEGNO SCATOLA BATTERIA	01B/1 01B/2
561.57605	TRAVERSA ATTACCO COFANO	01A/2
561.57606	CONTRASTO FRIZIONE	03A/1 03A/2
561.57607	DISTANZIALE CONTRASTO FRIZIONE	03A/1 03A/2
561.57614	CERNIERA COFANO YANMAR	01A/2 01A/3
561.58943	RONDELLA 7,0x25/2	05A/2
563.43058	ALBERO RUOTE	006/0
563.47484	RONDELLA SPALLAMENTO FRIZIONE	002/2
563.47700	PUNTALE D-8	008/0 008/1 008/2 08A/0
		08A/1 08A/2
563.49649	CONTRASTO GUAINA	13A/1
563.49782	CHIAVETTA MOTORE KOHLER	002/2 002/3

codice	denominazione	tavola
563.50306	SELETTORE COMANDO GAS	009/0 009/1
563.51685	ASTA POSIZIONE MANUBRIO	008/0 008/1 008/2 008/3
		008/4
563.56165	CHIAVETTA MOTORE HONDA	002/3
563.56251	RONDELLA SPALL.FRIZ. D=19,6	002/0 002/1 002/2 002/3
563.56328	ANELLO DI RASAMENTO SP=1,5	004/0 004/1 004/2 005/0
		005/1 005/2 05A/0 05A/1
		05A/2
563.56329	ANELLO DI RASAMENTO SP=1,6	004/0 004/1 004/2 005/0
		005/1 005/2 05A/0 05A/1
		05A/2
563.56330	ANELLO DI RASAMENTO SP=1,7	004/0 004/1 004/2 005/0
		005/1 005/2 05A/0 05A/1
		05A/2
563.56331	ANELLO DI RASAMENTO SP=1,8	004/0 004/1 004/2 005/0
		005/1 005/2 05A/0 05A/1
		05A/2
563.56348	ANELLO DI RASAMENTO	004/0 004/1 004/2 005/2
563.56924	PUNTALE	008/3 008/4 08A/3 08A/4
564.43857	DISTANZIALE DENT MC730-MF630	007/0
564.43871	ASTA	007/0 07A/0 07B/0
564.48183	DISTANZ.DENT.MC 740/745 MF 650	07A/0 07B/0
564.48196	INNESTO FRONTALE	07A/0 07B/0
564.56347	INGRANAGGIO INVERTITORE	004/0 004/1 004/2 005/0
		005/1 005/2 05A/0 05A/1
		05A/2
564.56350	PERNO INGRANAGGIO Z=15	004/0 004/1 004/2
564.56351	PERNO INGRANAGGIO	005/0 005/1 005/2 05A/0
		05A/1 05A/2
564.56475	VITE S.F. 2 PRINC	004/0 004/1 004/2 005/0
		005/1 005/2
564.56476	VITE S.F. 2 PRINC DS	05A/0 05A/1 05A/2
564.56479	VITE S.F. 4 PRINC SN	05A/2
564.58942	INNESTO A 3 DENTI D=25	05A/2
571.48509	FONDELLO DI PROT D32	08A/0 08A/1 08A/2 08A/3
		08A/4
571.50312	MOLLA A TAZZA	009/0 009/1
580.02429	SERRAFILO	007/0 009/0 009/1 009/2
		009/3 010/0 010/1 010/2
		010/3 010/4 08A/0 08A/1
		08A/2 08A/3 08A/4 10A/0
		10A/1 10A/2 10A/3
580.02538	LEVA COMANDO GAS	009/0 009/1 009/2 009/3
		010/0 010/1 010/2 010/3
		010/4 10A/0 10A/1 10A/2
		10A/3
580.20258	MOLLA SCATTO MARCE	011/4 011/5
580.26321	MOLLA RITORNO LEVA	08A/0 08A/1 08A/2 08A/3
		08A/4
580.27230	ANELLO PARAPOLVERE	08A/3 08A/4
580.42059	MOLLA	009/0 009/1
580.42067	FILO E GUAINA GAS L = 1530	010/0 010/1 010/2 010/3
		010/4
580.42111	TAMPONE ATTACCO COFANO	001/0 001/1 001/2 01A/2
		01A/3
580.42131	TAMPONE GOMMA D.36 M8	01C/0
580.42133	FUNE COFANO L=1500	01C/0
580.42167	CAPOGUAINA	007/0 008/3 008/4 009/0
		009/1 009/2 009/3 010/0
		010/1 010/2 010/3 010/4
		08A/0 08A/1 08A/2 08A/3
		08A/4 10A/0 10A/1 10A/2
		10A/3 13A/1
580.42200	SERRAFILO M6	010/0 010/2 010/3 010/4
		13A/0 13A/1
580.42202	VITE REGISTRO M8	009/0 009/1 009/2 009/3
		010/0 010/1 010/2 010/3
		010/4 10A/0 10A/1 10A/2
		10A/3

AGROSAL d.o.o.

codice	denominazione	tavola
580.42219	MOLLA	008/0 008/1 008/2 008/3
		008/4
580.42486	FILO E GUAINA GAS L = 1620	010/3
580.42746	CERCHIO 5J15 CR	013/2
580.43031	GOMMA ANTIURTO-USA-	01B/0
580.43032	SERIE CUSCINETTI ANTIURTO BAT.	01B/0 01D/0
580.43034	CABLAGGIO AVVIAMENTO MC-MF	01B/0
580.43036	RADDRIZZATORE CBPC 2504	01B/0 01B/1
580.43053	SPINA CILIND 6X20	003/0 003/1 003/2 003/3
		03A/0 03A/1 03A/2
580.43086	PATTINO	004/0 004/1 004/2 005/0
		005/1 005/2 05A/0 05A/1
		05A/2
580.43117	GUARNIZIONE COPERCHIO	003/0 003/1 003/2 003/3
		03A/0 03A/1 03A/2
580.43176	MOLLA	011/0 011/1 011/2 011/3
		012/0 012/1 012/2 012/3
		08A/0 08A/1 08A/2 08A/3
		08A/4
580.43216	FILO E GUAINA L=1160	10A/0 10A/1 10A/2 10A/3
580.43219	FILO E GUAINA GAS L = 1680	10A/0 10A/1 10A/2 10A/3
580.43250	CERCHIO RUOTA 2.50-8	013/0 013/1 013/2
580.43253	FILO E GUAINA L=930 INVERT.	10A/0
580.43855	GUARNIZIONE	007/0 07A/0
580.43874	MOLLA	007/0 07A/0 07B/0
580.43881	MOLLA	007/0 07A/0 07B/0
580.44804	CERCHIO 5JA12 CARR.VARIAB.	013/0 013/1 013/2
580.45804	SPIA LUMINOSA COBO 09209000	01B/2 01D/0
580.45805	INTERR AVV 0005+0009+0026	01D/0
580.45806	CHIAVE PIATTA COBO 14109108	01D/0
580.45807	COPRISERRATURA CIAM 123002	01D/0
580.46901	ADESIVA AVVIAMENTO (mr)	014/0 014/1
580.46902	ADESIVA MOTOR STOP	014/0 014/1
580.46903	ADESIVA FRIZIONE	014/0 014/1
580.46909	ADESIVA PERICOLO PER RIF. (mr)	014/0 014/1
580.46910	ADESIVA ATTENZ.PER TEMPER.(mr)	014/0 014/1
580.46912	ADESIVA COMANDO GAS	014/0 014/1 014/2
580.46913	ADESIVA COMBIN FRENI-GAS-DIFF	014/0 014/1 014/2
580.47410	COFANO COMPLETO MC 737	01A/0 01A/1
580.47438	TAMPONE GOMMA	01A/0 01A/1
580.47462	FILO E GUAINA COMANDO GAS	009/0 009/1
580.47568	CABLAGGIO MOT/STOP UNIF. (mr)	009/0 009/1 009/2 010/0
		010/1 010/2 010/3 10A/0
		10A/1 10A/2
580.47624	MOLLA SBLOCCAGGIO MANUBRIO	08A/0 08A/1 08A/2 08A/3
		08A/4
580.47629	FILO E GUAINA L=1080-CON ANIMA	009/0 009/1 009/2 009/3
580.47647	FILO E GUAINA L=1280 CON ANIMA	10A/0 10A/1 10A/2 10A/3
580.47649	GANCIO	10A/0 10A/1 10A/2 10A/3
580.47671	MOLLA INVERSORE	08A/0 08A/1 08A/2 08A/3
		08A/4
580.47701	MOLLA PUNTALE	008/0 008/1 08A/0 08A/1
		08A/2 08A/3 08A/4
580.47702	CAVO PIANTONE MC 737	08A/0 08A/1 08A/2 08A/3
		08A/4
580.47712	MOLLA M/STOP COMANDO DIRETTO	009/0 009/1 009/2 009/3
		010/0 010/1 010/2 010/3
		010/4 10A/0 10A/1 10A/2
		10A/3
580.47729	ADESIVA PIANTONE MC	014/0 014/1 014/2 08A/0
		08A/1 08A/2 08A/3 08A/4
580.48000	MANOPOLA D=27 GLISSA	009/0 009/1 009/2 009/3
		010/0 010/1 010/2 010/3
		010/4 10A/0 10A/1 10A/2
		10A/3
580.48002	SERRAFILO M4	10A/0 10A/1 10A/2 10A/3
580.48009	INTERRUTTORE STOP	009/0 009/1 009/2 009/3
		010/0 010/1 010/2 010/3
		010/4 10A/0 10A/1 10A/2

codice	denominazione	tavola
		10A/3
580.48012	FILO E GUAINA-1850-GAS	009/2 009/3 010/3 010/4
		10A/0 10A/1 10A/2
580.48124	CABLAGGIO MOTORE 6LD360	01B/0 01B/1
580.48214	CEPPO	13A/0 13A/1
580.48215	MOLLA	13A/0 13A/1
580.48330	CERCHIO 3.50D10 CR	013/0 013/1 013/2
580.48671	TIRANTE ELASTICO	01C/0
580.48674	GANCIO LUNGO	01C/0
580.49501	FILO E GUAINA MOT/STOP L-1790	10A/0 10A/1 10A/2 10A/3
580.49505	FILO E GUAINA MOT/STOP L-1610	010/0 010/1 010/2 010/3
		010/4
580.49541	CABLAGGIO S/FARI 745	01D/0
580.49545	COFANO MOTORE COMPLETO	01C/0
580.49582	ADESIVA IMPIANTO ILLUMINAZIONE	01D/0
580.49646	GUARNIZIONE COPERCHIO	07B/0
580.49663	FILO E GUAINA L=1350	10A/0 10A/1 10A/2 10A/3
580.49830	MOLLA PUNTALE	08A/3 08A/4
580.50345	MOLLA PER LEVA	009/0 009/1 009/2 010/0
		010/1 010/2 010/3 10A/0
		10A/1 10A/2 10A/3
580.51601	ADESIVA GAS MOT BRIGGS & STRAT	009/0 009/1
580.51670	GANCIO LEVA	009/0 009/1 009/2 009/3
		010/0 010/1 010/2 010/3
		010/4 10A/0 10A/1 10A/2
		10A/3
580.52304	CABLAGGIO MOT/STOP MF (mr)	009/0 009/1 009/2
580.56154	MOLLA RICHIAMO GAS HONDA G160	009/2 009/3 010/3 010/4
580.56391	MOLLA SCORREVOLE PDF	004/0 004/1 004/2 005/0
		005/1 005/2 05A/0 05A/1
		05A/2
580.56593	MOLLA LEVA FRIZIONE	009/3 010/4 10A/3
580.56918	MOLLA PIANTONE	008/2 008/3 008/4
580.56942	MOLLA SBLOCCAGGIO MANUBRIO	008/0 008/1 008/2 008/3
		008/4
580.56991	PASSACAVO 90/200/30 SH75-85	008/3 008/4 01A/2
580.57232	MOLLA PER LEVA CAMBIO	011/0 011/1 011/2 011/3
		011/4 011/5 012/0 012/1
		012/2 012/3 08A/0 08A/1
		08A/2 08A/3 08A/4
580.57263	SERRAFILO M 5 X MOTORI ACME	010/0 010/1 010/2 010/3
		010/4 10A/0 10A/1 10A/2
		10A/3
580.57264	FILO E GUAINA L=1450 (PER GAS)	009/0 009/1 009/2 009/3
580.57266	SOSTEGNO GUAINA	008/1 008/2 008/3 008/4
580.57273	MOLLA INVERTITORE MC720/730	012/0 012/1 012/2 012/3
580.57284	FILO E GUAINA SBLOCC.PIANTONE	010/0 010/1 010/2 010/3
		010/4
580.57285	FILO E GUAINA L=1130 (ANIMA)	010/0 010/1 010/2 010/3
		010/4
580.57286	FILO E GUAINA L=1010 X INVERT.	010/0 010/1
580.57287	FILO E GUAINA L=1080 X DIFFER.	010/0 010/1 010/2 010/3
		010/4
580.57288	FILO E GUAINA L=1380 PER GAS	010/0 010/1 010/2 010/3
		010/4
580.57328	FILO E GUAINA (L=900) INVERT.	10A/1 10A/2 10A/3
580.57329	FILO E GUAINA (L=980) INVERT.	010/2 010/3 010/4
580.57337	FILO E GUAINA L=1680 M/S	10A/2 10A/3
580.57342	FILO E GUAINA (L=1330) GAS	010/3 010/4
580.57343	FILO E GUAINA(L=1350)CON ANIMA	10A/2 10A/3
580.57384	CAVO MASSA ACT340	01B/1 01B/2
580.57386	CABLAGGIO MOTORE L100AE YANMAR	01B/1 01B/2
580.57401	CABLAGGIO MOT/STOP UNIFICATO	009/3 010/4 10A/3
580.57541	CARENATURA PIANTONE	001/0 001/1 001/2
580.57542	CARENATURA CENTRALE COMPL. BLU	001/0 001/1 001/2
580.57545	COFANO MOTORE	001/0 001/1 001/2 01A/2
		01A/3
580.57554	ADESIVA COFANO MC	001/0 001/1 001/2 01A/2
		01A/3

AGROSAL d.o.o.

codice	denominazione	tavola
580.57610	SCATOLA COPRI BATTERIA	01B/1 01B/2
580.57611	SERIE GOMMA ANTIURTO BATTERIA	01B/1 01B/2
580.57613	COFANO MOTORE REFORM	01A/2 01A/3
580.57676	ADESIVA MARCE 1+1	014/0 014/1 014/2
580.57677	ADESIVA MARCE 3+2	014/0 014/1 014/2
580.57678	ADESIVA PRESA DI FORZA	014/0 014/1 014/2
580.57679	ADESIVA CARROZZERIA PIANTONE	014/0 015/0 015/1
580.57680	ADESIVA PIANTONE 710	014/0 015/0 015/1
580.57681	ADESIVA 710	014/0 015/0 015/1
580.57682	ADESIVA 720	014/0 015/0 015/1
580.57683	ADESIVA 730	014/0 015/0 015/1
580.57688	ADESIVA COMBINATA GAS/DIFFER	014/0 014/1 014/2
580.57704	ADESIVA MARCE MC ITALIA/USA	014/0 014/1 014/2 08A/0
		08A/1 08A/2 08A/3 08A/4
580.57709	ADESIVA MC 740	014/0 015/0 015/1
580.57724	ADESIVA MANUALE ISTRUZIONI	014/0 014/1 014/2
580.57726	ADESIVA 746	015/0 015/1
580.57727	STRISCIA ADESIVA COFANO 746	01C/0
580.57734	ADESIVA COFANO 740	015/1
580.57767	ADESIVA PERICOLO PER RIFORNIM.	014/2
580.57768	ADESIVA ATTENZIONE PER TEMPER.	014/2
580.57770	ADESIVA FRIZIONE	014/2
580.57772	ADESIVA MOTOR STOP + AVV.	014/2
581.00052	RELE' BOSCH 0332002160	01B/0
581.47704	VITE REGISTRO M6	08A/0 08A/1 08A/2 08A/3
		08A/4
581.50313	BARILOTTO (021437)	009/0 009/1 009/2 009/3
		010/0 010/1 010/2 010/3
		010/4 10A/0 10A/1 10A/2
		10A/3
590.15425	TAPPO C/ASTA LIVELLO	003/0 003/1 003/2 003/3
		03A/0 03A/1 03A/2
590.43063	MOZZO RUOTA C/PRIGIONIERI	006/0
590.47417	PARAURTI COMPL.MOT.BENZINA	01A/0 01A/1
590.47422	PARAURTI COMPL.6LD360/400	01A/0 01A/1
590.47441	FERMO SUPERIORE COFANO CTO	01A/0 01A/1
590.47445	SUPPORTO COFANO COMPLETO	01A/0 01A/1
590.47608	MANUBRIO LARGO UNIFICATO CTO	10A/0
590.47610	PIANTONE COMPLETO	08A/0 08A/1 08A/2 08A/3
		08A/4
590.47620	LEVA SBLOCCAGGIO STEGOLA CTA	08A/0 08A/1 08A/2 08A/3
		08A/4
590.47625	LEVA BLOCCAGGIO PIANTONE CTA	08A/0 08A/1 08A/2 08A/3
		08A/4
590.47666	LEVA COMANDO POSIZ.INVERT.CTA	08A/0 08A/1 08A/2 08A/3
		08A/4
590.47688	ATTACCO PIANT.C/SIL.CH15 (mr)	08A/0 08A/1 08A/2
590.47708	SUPPORTO BATTERIA AT330 CTO	01B/0
590.47709	SUPPORTO INTERR STOP COMPLETO	009/0 009/1 009/2 009/3
		010/0 010/1 010/2 010/3
		010/4 10A/0 10A/1 10A/2
		10A/3
590.48042	SUPPORTO BATTERIA 725-735-604	01B/0
590.48122	SUPPORTO BATTERIA 6LD360 CTO	01B/0
590.48199	DIFFERENZIALE 737 COMPLETO	07A/0
590.48200	SEMIDISCO LEVA COMPLETO	13A/0 13A/1
590.48208	SEMIDISCO PERNO COMPLETO	13A/0 13A/1
590.48469	ATTACCO LEVA DOPPIA D.27 C.	10A/0 10A/1 10A/2 10A/3
590.49515	ATTACCO INFERIORE COMPLETO	01C/0
590.49550	SCATOLA BATTERIA COMPL.745	01D/0
590.49637	DIFFER CTO 745	07B/0
590.51682	PIANTONE MANUBRIO COMPLETO	008/0 008/1 008/2 008/3
		008/4
590.52040	PARAURTI COMPLETO	01C/0
590.56056	PARAURTI A220 COMPL.X MC 720	001/0 001/1 001/2
590.56062	PARAURTI IM/ALN COMPL.X MC720	001/0 001/1 001/2 01A/2
		01A/3
590.56066	PARAURTI A220 COMPL.X MC 710	001/0 001/1 001/2
590.56067	PARAURTI B&S5HP COMPL.X MC710	001/0 001/1 001/2

codice	denominazione	tavola
590.56073	PARAURTI COMPL 15LD/ACT	001/0 001/1 001/2 01A/2
		01A/3
590.56087	PARAURTI COMPL.GX200	001/1 001/2
590.56091	PARAURTI COMPLETO 6LD435	01A/2
590.56108	PARAURTI YANMAR C.TO ROSSO	01A/2 01A/3
590.56258	FORCELLA FRIZIONE COMPLETA	01B/1 01B/2
590.56365	INGR PRESA DI FORZA COMPLETO	005/0 005/1 005/2 05A/0
		05A/1 05A/2
590.56375	ALBERO CAMBIO COMPLETO mr	004/0
590.56378	ALBERO CAMBIO COMPLETO	004/1 004/2
590.56380	INGRANAGGIO DOPPIO COMPLETO mr	005/0
590.56383	INGRANAGGIO TRIPLO COMPL.	05A/1 05A/2
590.56384	INGRANAGGIO DOPPIO COMPLETO	005/1 005/2
590.56385	INGRANAGGIO TRIPLO COMPLETO	05A/0
590.56900	SUPPORTO MANUBRIO COMPLETO	011/0 011/1 011/2 011/3
		011/4 011/5
590.56905	COPPA COMPLETA	011/0 011/1 011/2 011/3
		011/4 011/5
590.56909	SUPPORTO GUIDA MC COMPLETO(mr)	008/3
590.56911	SUPPORTO GUIDA MC COMPLETO	008/2
590.56912	PIANTONE MC COMPLETO	008/2 008/3 008/4
590.56920	SUPP.PIANTONE COMPL.DI SILENT.	012/3
590.56935	LEVA SELETTORE MANUBRIO COMPL.	008/0 008/1 008/2 008/3
		008/4
590.56949	SUPP.PIANT.COMPL.DI SILENT.mr	012/0 012/1 012/2
590.56952	SUPPORTO GUIDA MC COMPLETO	008/4
590.56955	PIANTONE MC COMPLETO	008/0 008/1
590.56960	SUPPORTO PIANTONE COMPL. (mr)	08A/3
590.56964	SUPPORTO GUIDA COMPLETO	008/0 008/1
590.56969	ATTACCO PIANTONE C/SILENTBLOC	08A/3 08A/4
590.56970	SUPP.PIANTONE COMPLETO (mr)	08A/0 08A/1 08A/2
590.56972	SUPPORTO PIANTONE COMPLETO	08A/4
590.57085	MANUBRIO 3+2 COMPLETO	010/0 010/1
590.57105	MANUBRIO COMPL.DI SILENTBLOC	009/0 009/1
590.57112	MANUBRIO COMPL.SILENTBLOC	009/2 009/3
590.57115	MANUBRIO LARGO UNIFICATO CTO	10A/1 10A/2 10A/3
590.57116	MANUBRIO COMPL.(3+2)	010/2 010/3 010/4
590.57228	LEVA CAMBIO MC 710 COMPLETA	011/0 011/1 011/2 011/3
		011/4 011/5
590.57251	LEVA CAMBIO 3+2 COMPLETA	012/0 012/1 012/2 012/3
590.57268	LEVA INVERS MC720/730 CTA mr*	012/0 012/1
590.57277	LEVA INVERTITORE COMPLETA	08A/0
590.57300	LEVA CAMBIO MC 740 COMPLETA	08A/0 08A/1 08A/2 08A/3
		08A/4
590.57317	LEVA INVERTITORE COMPLETA MC	08A/1 08A/2 08A/3 08A/4
590.57319	LEVA INVERTITORE MC720/730 COM	012/2 012/3
590.57325	LEVA CONTRASTO PDF COMPL	011/3 011/4 011/5
590.57338	CONTRASTO PDF COMPLETO	011/0 011/1 011/2
590.57547	STAFFA PER COFANO COMPLETA	001/0
590.57550	SUPPORTO COMPLETO 3+2	001/0 001/1 001/2
590.57556	SUPPORTO 3+2 PER 15LD315 CTO	001/0 001/1 001/2
590.57596	SUPPORTO COMPLETO (ACT340)	01A/2 01A/3
590.57599	SUPPORTO COMPLETO 6LD435	01A/2
590.57601	ATTACCO COFANO 6LD435 COMPLETO	01A/2
590.57604	SCATOLA BATT.6LD435-YANMAR COM	01B/1 01B/2
590.57608	SCATOLA BATTERIA ACT340 COMPL.	01B/1 01B/2
590.57612	SUPPORTO COMPLETO (ALN330)	01A/2
590.57615	SUPPORTO COMPLETO YANMAR	01A/2
592.43150	FRIZ.CONICA AUT.COMP.D19 1MOL.	002/0
592.47884	FRIZIONE CONICA CTA	002/0 002/1 002/2 002/3
592.47907	FRIZIONE CONICA CTA KOH 8HP	002/0
592.47924	FRIZIONE CONICA CTA 12HP	002/0 002/2 002/3
592.47970	FRIZ.AUT.COM.B&S 11HP-VAN.12HP	002/2
592.47971	FRIZ.CONICA AUT.COMP-2MOL.10CV	002/0 002/1 002/2 002/3
592.48175	DIFFER CTO Z49 DESTRO C/RINF	007/0
592.56252	FRIZIONE CTA D19 B&S HP5 MC710	002/0 002/1 002/2
592.56265	FRIZIONE CTA D19 MOTORI B&S	002/3
922.42460	COPPIA ANELLI GEMELLAGGIO	013/0 013/1 013/2
922.42474	COPPIA RUOTE GABBIA D.CM 49	013/0 013/1 013/2

AGROSAL d.o.o.

codice	denominazione	tavola
922.43682	COPPIA RUOTE GABBIA D.CM.43	013/0
922.43683	COPPIA RUOTE METALLICHE STRETT	013/0
922.43685	COPPIA DISTANZ.RUOTE CM6	013/0 013/1 013/2
922.43686	ZAVORRA 8 POLL. KG.11 -COPPIA-	013/0 013/1 013/2
922.48715	ZAVORRE 10 POLL.KG.15 -COPPIA-	013/0 013/1 013/2
922.48720	ZAVORRE 12 POLL.KG.34 -COPPIA-	013/0 013/1 013/2
922.48923	ZAVORRA KG.12 BARRA CENTRALE	013/0 013/1 013/2
922.49993	COPPIA RUOTE GABBIA D.CM 580	013/2
922.57779	COPPIA RUOTE GABBIA D.CM 43	013/1 013/2

codice	denominazione	tavola

AGROSAL d.o.o.

codice	denominazione	tavola
F08.31193010	SPRING DM 15X70	011/5 012/3
300.00001	GREASE NIPPLE M.10	08A/3 08A/4
300.00021	ROPE CLIP 3/16"	01C/0
300.00276	WRENCH	01B/0 01B/1 01B/2
300.00277	SWITCH	01B/0 01B/1 01B/2
300.00295	STICKER 91SL F/BONNET 6LD400	01D/0
300.00551	FUSE 6X25 25A	01B/0 01D/0
300.00612	EXPANS. BOLT OTECO CP3516 M6	008/1 008/2 008/3 008/4
300.00628	CABLE GLAND TYPE DA90/200/30	001/0 001/1 001/2 008/0
		008/1 008/2
300.00629	CABLE GLAND TYPE DA80/110/3	001/0 001/1 001/2
300.10103	SILENTBLOCK	009/0 009/1 009/2 009/3
300.10120	SILENTBLOCK 12X40X58X66-47602	08A/0 08A/1 08A/2 08A/3
		08A/4
300.10142	SILENTBLOCK	012/0 012/1 012/2 012/3
300.40001	PLUG 1/4 GAS UNI 364	003/0 003/1 003/2 003/3
		03A/0 03A/1 03A/2
300.40133	PLUG 22 DIN 470 ACC.	003/0 003/1 003/2 003/3
311.00003	HEX SCREW 5/16X7/8 UNF 2A AC	002/0 002/1 002/2 002/3
311.00015	SCREW 3/8X1	002/2
311.00786	SCREW M8X30 UNI 5923	002/0 002/1 002/2 002/3
311.00787	SCREW M8X35 UNI 5923 8G	002/0 002/1 002/2 002/3
311.11086	HEX SCREW M4X25	009/0 009/1 009/2 009/3
		010/0 010/1 010/2 010/3
		010/4 10A/0 10A/1 10A/2
		10A/3
311.11089	HEX. SCREW M5X10 UNI 5739 8G	009/0 009/1
311.11090	HEX. SCREW M6X10 UNI 5739 8G	003/0 003/1 003/2 003/3
		01C/0 03A/0 03A/1 03A/2
311.11091	HEX. SCREW M6X14 UNI 5739 8G	01A/1 01A/2 01A/3 01D/0
		010/0 010/3 010/4 13A/1
311.11097	HEX. SCREW M6X45 UNI 5737 8G	009/0 009/1 009/2 009/3
		010/0 010/1 010/2 010/3
		010/4 10A/0 10A/1 10A/2
		10A/3
311.11151	HEX. SCREW M8X16 UNI 5739 8G	001/0 001/1 001/2 01A/0
		01A/2 01A/3 08A/0 08A/1
		08A/2 08A/3 08A/4
311.11217	HEX SCREW M10X75 UNI 5739-5S	012/0 012/1 012/2 012/3
311.11225	HEX SCREW M10X90 UNI 5737 8G	08A/0 08A/1 08A/2 08A/3
		08A/4
311.11229	HEX SCREW M10X110 UNI 5737 8G	008/0 008/1 008/2 008/3
		008/4
311.12089	HEX. SCREW M6X25 UNI 5739-8G	009/0 009/1 009/2 009/3
		010/0 010/1 010/2 010/3
		010/4 10A/0 10A/1 10A/2
		10A/3
311.12090	HEX. SCREW M6X16 UNI 5739-8G	010/2 05A/2 13A/0
311.12091	HEX SCREW M6X40 UNI 5739-8G	009/0 009/1
311.12092	HEX SCREW M6X35 UNI 5739-8G	010/0 010/1 010/2 010/3
		010/4 10A/0 10A/1 10A/2
		10A/3
311.12148	HEX. SCREW M8X14 UNI 5739 8G	08A/0 08A/1 08A/2 08A/3
		08A/4
311.12149	HEX. SCREW M8X12 UNI 5739-8G	08A/0 08A/1 08A/2 08A/3
		08A/4
311.12150	HEX. SCREW M8X20 UNI 5739-8G	01A/0 01A/1 01A/2 011/0
		011/1 011/2 011/3 011/4
		011/5 03A/0 03A/1 03A/2
		07B/0
311.12152	EX. SCREW M8X30 UNI 5739-8G	007/0 012/0 012/1 012/2
		012/3 07A/0 07B/0
311.12153	HEX SCREW M8X35 UNI 5739-8G	008/2 008/3 008/4 009/0
		009/1 009/2 009/3 010/0
		010/1 010/2 010/3 010/4
		08A/0 08A/1 08A/2 10A/0
		10A/1 10A/2 10A/3
311.12154	HEX SCREW M8X40	001/1 001/2 01A/2 01A/3
		08A/3 08A/4

codice	denominazione	tavola
311.12156	HEX SCREW M8X60 UNI 5739-8G	001/0 001/1 001/2
311.12158	HEX SCREW M8X70	01C/0
311.12159	HEX SCREW M8X65	001/0
311.12164	HEX SCREW M8X75 UNI 5739 8G	008/0 008/1
311.12210	SCREW TE M10X20 UNI 5739 8G	003/2 003/3 01C/0
311.12211	HEX. SCREW M10X30 UNI 5739-8G	005/0 005/1 005/2 05A/0
		05A/1 05A/2
311.12217	HEX. SCREW M10X80 UNI 5737 8G	008/0 008/1 008/2 008/3
		008/4 009/0 009/1 009/2
		009/3
311.12219	HEX. SCREW M10X25 UNI 5739-8G	01C/0
311.12293	HEX SCREW M12X80 UNI 5737 8G	008/2 008/3 008/4
311.12294	SCREW	008/0 008/1 008/2 008/3
		008/4
311.12295	HEX SCREW M12X95 UNI 5739 8G	08A/0 08A/1 08A/2 08A/3
		08A/4
311.21004	FLANGED SCREW M.5X12	001/0 001/1 001/2
311.21005	FLANGED SCREW M.6X25	001/0 001/1 001/2
311.21558	SCREW M6X16	01A/2 01B/1 01B/2
311.32562	SCREW M6X16	003/0 003/1 003/2 003/3
311.52057	SCREW TCCEI M6X16 UNI 5931 8G	01A/0
311.52085	SCREW TCCEI M8X25 UNI 5931 8G	13A/0 13A/1
311.52103	SCREW M10X25	003/0 003/1 003/2 003/3
		007/0 03A/0 03A/1 03A/2
311.61043	PHILLIPS SCREW M 4X30 UNI6107	01B/0 01B/1
312.01212	HEX NUT INS.M12 UNI 5593 6S	011/0 011/1 011/2 011/3
		011/4 011/5
312.11040	NUT M4 UNI 5588-5S	009/0 009/1 009/2 009/3
		01B/0 01B/1 010/0 010/1
		010/2 010/3 010/4 10A/0
		10A/1 10A/2 10A/3
312.11050	NUT M5 UNI 5588-5S	009/0 009/1
312.11060	NUT M6 UNI 5588-5S	01B/0 01D/0 08A/0 08A/1
		08A/2 08A/3 08A/4
312.11080	NUT M8 UNI 5588-5S	001/0 001/1 001/2 002/0
		002/1 002/2 002/3 008/0
		008/1 008/2 009/0 009/1
		009/2 009/3 01A/0 01A/1
		01A/2 01A/3 010/0 010/1
		010/2 010/3 010/4 011/0
		011/1 011/2 10A/0 10A/1
		10A/2 10A/3
312.11100	NUT M 10 UNI 5588 6S	006/0 007/0 013/0 013/1
		013/2 03A/0 03A/1 03A/2
		07A/0 07B/0
312.21121	NUT M12x1,25 UNI 5587 6S	003/0 003/1 003/2 003/3
		03A/0 03A/1 03A/2
312.31080	NUT M 8 UNI 5589 6S	010/0 010/1 010/2 010/3
		010/4
312.41052	FLANGED LOCKING NUT DEF.M.5	001/0 001/1 001/2
312.41060	LOCKNUT M 6	009/0 009/1 009/2 009/3
		01A/0 01A/1 01A/2 01B/0
		01B/1 01B/2 01D/0 010/0
		010/1 010/2 010/3 010/4
		10A/0 10A/1 10A/2 10A/3
312.41080	LOCKNUT M 8	001/0 001/1 001/2 003/0
		003/1 003/2 003/3 007/0
		008/0 008/1 008/2 008/3
		008/4 009/2 009/3 01A/2
		01A/3 01B/1 01B/2 01C/0
		010/0 010/1 010/2 010/3
		010/4 011/0 011/1 011/2
		011/3 011/4 011/5 012/0
		012/1 012/2 012/3 03A/0
		03A/1 03A/2 07A/0 07B/0
		08A/0 08A/1 08A/2 08A/3
		08A/4 13A/1
312.41083	SELF LOCKING NUT M8	009/0 009/1
312.41085	LOCKING NUT M8 DEFORM.6S	003/0 003/1 003/2 003/3

AGROSAL d.o.o.

codice	denominazione	tavola
		011/0 011/1 011/2 011/3
		011/4 011/5 012/0 012/1
		012/2 012/3 03A/0 03A/1
		03A/2
312.41100	LOCKNUT M 10	008/0 008/1 008/2 008/3
		008/4 009/0 009/1 009/2
		009/3 012/0 012/1 012/2
		012/3
312.41101	LOCKNUT M10 LOW	08A/0 08A/1 08A/2 08A/3
		08A/4
312.41120	SELF-LOCKING NUT M12	006/0 008/0 008/1 008/2
		008/3 008/4
312.41121	SELF-LOCKING NUT M12 LOW	08A/0 08A/1 08A/2 08A/3
		08A/4
312.41124	NUT	03A/2
312.41126	SELF LOCKING NUT M12 DEF.	008/2 008/3 008/4
313.12080	STUD M8X46X20X12	007/0 07A/0
313.12082	STUD M8X38X14X20	003/0 003/1 003/2 003/3
		011/0 011/1 011/2 011/3
		011/4 011/5 012/0 012/1
		012/2 012/3 03A/0 03A/1
		03A/2
313.12083	STUD M8X46X16X16	002/0 002/1 002/2 002/3
313.12084	STUD M8X58X16X16 8G	003/0 03A/0 03A/1 03A/2
313.12085	STUD	07B/0
313.12086	STUD M8X56X20X14 8G	003/1 003/2 003/3
313.12088	STUD M8X40X14X14	002/0 002/1 002/2 002/3
313.12089	STUD	07B/0
313.12094	STUD M8X70X16X16 8G	003/0 003/1 003/2 003/3
		03A/0 03A/1 03A/2
313.12101	STUD M10X37X19X15 8G	03A/0 03A/1 03A/2
313.12102	STUD M10X40X22X14 8G	006/0 007/0 013/0 013/1
		07A/0 07B/0
313.12103	STUD M10X46X24X16 8G	013/2
313.12124	STUD 56XM12X1.25X26XM12X22 8G	003/0 003/1 003/2 003/3
		03A/1 03A/2
313.12125	STUD	003/1 003/2 003/3 03A/0
		03A/1 03A/2
314.11043	FLAT WASHER 4.3 UNI 1733	009/0 009/1 009/2 009/3
		010/0 010/1 010/2 010/3
		010/4 10A/0 10A/1 10A/2
		10A/3
314.11064	WASHER P.6,4X12,5 UNI 6592	008/1 008/2 008/3 008/4
		009/1 009/2 009/3 01A/2
		01B/0 01C/0 010/1 010/2
		010/3 010/4 10A/0 10A/1
		10A/2 10A/3
314.11084	WASHER P.8,4X17 UNI 6592	001/0 001/1 001/2 007/0
		01A/2 01A/3 010/0 010/1
		010/2 010/3 010/4 07A/0
		07B/0 08A/0 08A/1 08A/2
		08A/3 08A/4 10A/0 10A/1
		10A/2 10A/3 13A/1
314.11104	FLAT WASHER10.5X18 UNI6592AC.	001/0 001/1 001/2 01A/1
		01A/2 01A/3 011/0 011/1
		011/2 011/3 011/4 011/5
		012/0 012/1 012/2 012/3
		08A/0 08A/1 08A/2 08A/3
		08A/4
314.11105	WASHER P.10,5X21 UNI 6592	01A/0 01C/0
314.11130	WASHER P.13X24 UNI 6592	009/0 009/1
314.13043	FLAT WASHER	01C/0
314.14130	FLAT WASHER 13	011/5 012/3 08A/3 08A/4
314.21083	SUPER WASHER 8 DIN6796 GALV.	003/0 003/1 003/2 003/3
		01A/0 01A/1 01A/2 01B/1
		01B/2 01C/0 011/0 011/1
		011/2 011/3 011/4 011/5
		012/0 012/1 012/2 012/3
		03A/0 03A/1 03A/2 08A/0

codice	denominazione	tavola
		08A/1 08A/2 08A/3 08A/4
314.21100	SPRING	008/2 008/3 008/4
314.21101	TOP WASHER 10	003/2 003/3 005/0 005/1
		005/2 05A/0 05A/1 05A/2
314.21130	TOP WASHER 12	006/0 008/0 008/1 008/2
314.21132	TAPERED WASHER	003/3 011/5 03A/2
314.22064	SPRING WASHER 6.4 DIN 137	003/0 003/1 003/2 003/3
		009/0 009/1 01A/0 01A/1
		01A/2 01A/3 03A/0 03A/1
		03A/2 10A/0 10A/1 10A/2
		10A/3
314.23043	SPRING WASHER B 4.3	009/0 009/1 009/2 009/3
		01B/0 01B/1 010/0 010/1
		010/2 010/3 010/4 10A/0
		10A/1 10A/2 10A/3
314.23084	SPRING WASHER B 8.4 DIN 137	001/0 001/1 001/2 002/0
		002/1 002/2 002/3 003/0
		003/1 003/2 003/3 007/0
		008/0 008/1 008/2 008/3
		008/4 009/0 009/1 009/2
		009/3 01A/0 01A/1 01A/2
		01A/3 010/0 010/1 010/2
		010/3 010/4 011/3 011/4
		011/5 012/0 012/1 012/2
		012/3 03A/0 03A/1 03A/2
		07A/0 07B/0 08A/0 08A/1
		08A/2 08A/3 08A/4 10A/0
		10A/1 10A/2 10A/3
314.23105	SPRING WASHER B10,5 DIN 137	002/2 006/0 007/0 008/0
		008/1 008/2 008/3 008/4
		009/0 009/1 009/2 009/3
		01C/0 013/0 013/1 013/2
		03A/0 03A/1 03A/2 07A/0
		07B/0 08A/0 08A/1 08A/2
		08A/3 08A/4
314.23130	SPRING WASHER B 13 DIN 137	003/0 003/1 003/2 008/3
		008/4 011/0 011/1 011/2
		011/3 011/4 03A/0 03A/1
		08A/0 08A/1 08A/2 08A/3
		08A/4
314.40004	SPRING WASHER FOR PIN D-4	08A/0 08A/1 08A/2 08A/3
		08A/4
315.10098	TAPPING SCREW 6.3X16	01A/0 01A/1
315.10099	TAPPING SCREW 6.3X38 UNI 6950	001/0 001/1 001/2 01A/0
315.10100	TAPPING SCREW HEX 6.3X19	01A/1 01A/2 01A/3
315.10640	SCRW TAPPING 6.3X32 UNI6950 B	01A/1
333.12500	RIVET	01C/0
341.10028	COTTER PIN 3X15 UNI 1336 ACC.	011/0 011/1 011/2 011/3
		011/4 011/5 012/0 012/1
		012/2 012/3 08A/0 08A/1
		08A/2 08A/3 08A/4
341.10030	COTTER PIN 3X20 UNI 1336	001/0 001/1 001/2 01A/0
		01A/1 01A/2 01A/3 01C/0
342.11025	SPLIT PIN 2.5X22 DIN 1481	004/0 004/1 004/2
342.11028	SPLIT PIN 3X18 DIN 1481	008/0 008/1 008/2 008/3
		008/4
342.11041	SPLIT PIN 4X35	008/0 008/1 008/2 008/3
		008/4
342.11042	SPLIT PIN 4X25	005/0 005/1 005/2 05A/0
		05A/1 05A/2
342.11084	SPLIT PIN 8X40 DIN 1481	008/0 008/1
342.13020	SPLIT PIN 4X20 SPIROL	010/0 010/1 010/2 010/3
		010/4 011/0 011/1 011/2
		011/3 011/4 011/5 012/0
		012/1 012/2 012/3 08A/0
		08A/1 08A/2 08A/3 08A/4
		10A/0 10A/1 10A/2 10A/3
342.13022	SPLIT PIN SW 3X22 SPIROL	011/0 011/1 011/2 011/3
		011/4 011/5 012/0 012/1

AGROSAL d.o.o.

codice	denominazione	tavola
		012/2 012/3 08A/0 08A/1
		08A/2 08A/3 08A/4
342.13024	SPLIT PIN 4X24 SPIROL	011/0 011/1 011/2 011/3
		011/4 011/5 012/0 012/1
		012/2 012/3 08A/0 08A/1
		08A/2 08A/3 08A/4
342.13040	PIN 4X45 SPIROL	07B/0
342.13060	SPLIT PIN 6X24 SPIROL	004/0 004/1 004/2 005/0
		005/1 005/2 05A/0 05A/1
		05A/2
342.13061	SPLIT PIN 6X20 SPIROL U.6876	004/0 004/1 004/2 005/0
		005/1 005/2 011/0 011/1
		011/2 011/3 011/4 011/5
		05A/0 05A/1 05A/2
342.21070	PARALLEL PIN	008/0 008/1 008/2 008/3
		008/4
343.11060	KEY 6X10 UNI 6606	006/0
351.11047	SNAP RING INSIDE D 47 DIN 472	007/0 05A/2 07A/0
351.11052	INSIDE SEEGER D 52 DIN 472	004/0 004/1 004/2 005/0
		005/1 005/2 006/0
351.11053	SNAP RING INS.D52 PES.UNI7438	05A/0 05A/1 05A/2
351.11055	SNAP RING INS.D 55 DIN 472	004/0 004/1 004/2 005/0
		005/1 005/2 05A/0 05A/1
		05A/2
351.21031	SNAP RING OUTS.30 S.HVY U7436	004/0 004/1 004/2 005/0
		005/1 005/2 05A/0 05A/1
		05A/2
352.11120	SPLIT RING	004/0 004/1 004/2 005/0
		005/1 005/2 05A/0 05A/1
		05A/2
371.11150	BEARING 15X35X11 6202	004/0 004/1 004/2 005/0
		005/1 005/2 05A/0 05A/1
		05A/2
371.11152	BEARING 63-02-15X42X13	004/0 004/1 004/2 005/0
		005/1 005/2 05A/0 05A/1
		05A/2
371.11170	BEARING 17X40X12 6203	07B/0
371.11202	BEARING 20X52X15 6304	007/0
371.11250	BEARING 25X52X15 6205	004/0 004/1 004/2 005/0
		005/1 005/2 006/0 07A/0
		07B/0
371.11253	BEARING 25X47X12 6005	007/0 07A/0
371.12173	BEAR.6203 2RS/C3 17X40X12 SKF	002/0 002/1 002/2 002/3
371.12229	BEARING 6006 30X55X13 SKF	004/0 004/1 004/2 005/0
		005/1 005/2 05A/0 05A/1
		05A/2
371.12231	BRNG.6204 2RS1 C320X47X14 SKF	002/0 002/1 002/2 002/3
371.12233	BEARING 6006 2RS1 SKFC3	002/2
371.12252	BEARING 25X47X12 ST 2RS 6005	05A/2
371.12253	BEARING	07B/0
371.41250	BEARING	05A/0 05A/1 05A/2
373.20120	RETAINER K12X15X10 H	004/0 004/1 004/2 005/0
		005/1 005/2 05A/0 05A/1
		05A/2
379.10832	BALL 1/4 RIV RB 6.35	004/0 004/1 004/2 005/0
		005/1 005/2 009/0 009/1
		05A/0 05A/1 05A/2
379.11532	BALL 15/32 RIV RB 11.906	011/0 011/1 011/2 011/3
		011/4 011/5 012/0 012/1
		012/2 012/3 08A/0 08A/1
		08A/2 08A/3 08A/4
381.11191	OR 115 11,91X2,62	011/5 012/3 08A/3 08A/4
381.11400	OR 2056 14.00X1.78	007/0 07A/0 07B/0
381.12817	OR 4112 28.17X3.53	08A/0 08A/1 08A/2 08A/3
		08A/4
382.02502	OIL SEAL DH1 14X18X3 A	011/0 011/1 012/0
382.11400	OIL SEAL 14X22X4	011/0 011/1 011/2 011/3
		011/4 011/5 012/0 012/1
		012/2 012/3 08A/0 08A/1

codice	denominazione	tavola
		08A/2 08A/3 08A/4
382.11500	OIL SEAL 15X28X6	004/2 005/1 005/2 03A/0
		03A/1 03A/2
382.11501	OIL SEAL 15X40X10 NORMAL	004/0 004/1 005/0
382.12501	OIL SEAL 25X52X10 NORMAL	006/0
382.13002	OIL SEAL 30X40X7 NORMAL	007/0 07A/0
382.13003	OIL SEAL 30X47X7 NORMAL	07B/0
382.13800	OIL SEAL 38X55X7	004/0 004/1 004/2 005/0
		005/1 005/2 05A/0 05A/1
		05A/2
391.13502	TYRE 3.50-8 2PR TRAC.	013/0 013/1 013/2
391.14008	TYRE TRACTOR 4.00X8 2PR	013/0 013/1 013/2
391.14010	TYRE TRACTOR 4.0-10 2PR	013/0 013/1 013/2
391.15010	TYRE 5.0X10	013/1 013/2
391.15012	REIFEN TM 5.00-12 2PR	013/0 013/1 013/2
391.16018	TYRE 6.5/80-12	013/1 013/2
391.16020	TYRE TRACTOR 6.5/80X15	013/2
394.13502	TUBE 3,50 8P.	013/0 013/1 013/2
394.14008	TUBE 4.00X8	013/0 013/1 013/2
394.14010	TUBE 4.0-10	013/0 013/1 013/2
394.15010	TUBE 5.0-10	013/1 013/2
394.15012	TUBE 5.00-12	013/0 013/1 013/2
394.16018	TUBE 6.5/80X12	013/1 013/2
394.16020	TUBE 6.5/80-15	013/2
509.47833	SHORT CLUTCH LEVER	002/0 002/1 002/2 002/3
509.56262	CLUTCH LEVER ELECTRIC	002/2 002/3
513.59229	EXTENSION BODY 80 MM	03A/1 03A/2
521.56917	WEDGE	008/2 008/3 008/4
523.57250	PTO PINION	011/0 011/1 011/2 011/3
		011/4 011/5 012/0 012/1
		012/2 012/3 08A/0 08A/1
		08A/2 08A/3 08A/4
524.43852	RIGHT LONG HALF-AXLE	007/0
524.43853	LEFT SHORT HALF-AXLE	007/0
524.47896	CONE PRESSURE PLATE	002/0 002/1 002/2 002/3
524.48182	INCREASED SIZE COUPLE	007/0
524.48187	LEFT SHORT HALF-AXLE D-25	07A/0
524.48188	RIGHT LONG HALF-AXLE D-25	07A/0
524.49640	RH GEAR UNIT SHAFT D=25 LONG	07B/0
524.49641	GEAR UNIT	07B/0
524.49642	LH GEAR UNIT SHAFT D=25 SHORT	07B/0
524.49643	HALF-AXLE 745	07B/0
524.56335	PTO SHAFT	004/0 004/1 004/2 005/0
		005/1 005/2
524.56336	PTO SHAFT	05A/0 05A/1 05A/2
524.56339	CLUTCH SHAFT	004/0 004/1 004/2 005/0
		005/1 005/2
524.56340	CLUTCH SHAFT	05A/0 05A/1 05A/2
524.56344	REVERSE SPEED GEAR SUPPORT	005/0 005/1 05A/0 05A/1
		05A/2
524.56349	REVERSE SPEED GEAR SUPPORT	005/2
524.56354	GEARBOX 1ST GEAR	004/0 004/1 004/2 005/0
		005/1 005/2 05A/0 05A/1
		05A/2
524.56356	SLIDER GEARS 1+1	004/1 004/2
524.56357	SPEED SLIDING GEAR	004/0
524.56358	SLIDER GEARS	005/0
524.56359	SLIDER GEARS	05A/0
524.56360	SPEED SLIDING GEAR 4+3	05A/1 05A/2
524.56361	SPEED SLIDING GEAR 3+2	005/1 005/2
524.56362	PTO COUPLE	004/0 004/1 004/2 005/0
		005/1 005/2 05A/0 05A/1
		05A/2
524.56370	REVERSER SLIDER	005/0 005/1 005/2 05A/0
		05A/1 05A/2
524.56389	GEAR SLIDER LEVER	004/0 004/1 004/2 005/0
		005/1 005/2 05A/0 05A/1
		05A/2
524.56390	PTO SLIDER LEVER	004/0 004/1 004/2 005/0

AGROSAL d.o.o.

codice	denominazione	tavola
		005/1 005/2 05A/0 05A/1
		05A/2
524.57866	SHAFT EXTENSION 80 MM 3KN	05A/2
530.48656	OVAL TRADEMARK	01A/0 01C/0 014/0 015/0
		015/1 08A/0 08A/1 08A/2
		08A/3 08A/4
531.43128	TOP COVER WITH M10 HOLE	003/0 003/1 003/2 003/3
531.43712	WHEEL SPACER	013/0 013/1 013/2
531.43875	GEARBOX COVER F.DIFFERENTIAL	003/0 003/1 003/2 003/3
		03A/0 03A/1 03A/2
531.47482	ENGINE FLANGE VANGUARD 12.5CV	002/2
531.56325	GEARBOX CASING	003/0 003/1 003/2 003/3
531.56326	GEARBOX CASING	03A/0 03A/1 03A/2
531.56332	REAR COVER	003/0 003/1 003/2 003/3
		03A/0 03A/1 03A/2
531.56342	REVERSE SPEED GEAR SUPPORT	003/1 003/2 003/3
531.56343	REVERSE SPEED GEAR SUPPORT	003/0
531.56345	REAR COVER	03A/1 03A/2
531.56346	DIFFERENTIAL HOUSING	003/2 003/3
532.43851	HALF-AXLE HUB	007/0 07A/0
532.47468	FLANGE H21 FOR ENGINES 5HP	002/0 002/1 002/2 002/3
532.49635	GEAR UNIT	07B/0
541.43090	CROWN GEAR Z 49 RIGHT-HAND MC	006/0
551.02678	RING RUBBER	003/0 003/1 003/2 003/3
		03A/0 03A/1 03A/2
551.02714	FLAT KNOB	008/0 008/1 008/2 008/3
		008/4 08A/0 08A/1 08A/2
		08A/3 08A/4
551.42076	KNOB	011/0 011/1 011/2 011/3
		011/4 011/5 012/0 012/1
		012/2 012/3 08A/0 08A/1
		08A/2 08A/3 08A/4
551.42109	BUSHING	001/0 001/1 001/2 01A/0
		01A/1 01A/2 01A/3 01C/0
551.47842	HOOD (FOR CLUTCH LEVER)	002/0 002/1 002/2 002/3
551.57609	HOOD	002/2 002/3
552.42528	SWIVEL D 10	011/1 011/2 011/3 011/4
		011/5
552.43340	CUT CONTROL ROD MOUNT	008/0 008/1 008/2 008/3
		008/4 009/0 009/1 009/2
		009/3 08A/0 08A/1 08A/2
		08A/3 08A/4
552.47636	INSTRUMENT PANEL COLUMN	08A/0 08A/1 08A/2 08A/3
		08A/4
552.47644	GEAR BALL-JOINT MC	08A/0 08A/1 08A/2 08A/3
		08A/4
552.48036	MOTOR STOP LEVER	009/0 010/0
552.48038	MOTOR STOP SHEATH STOP	010/0 010/1 010/2 010/3
		010/4 10A/0 10A/1 10A/2
		10A/3
552.48041	LEVER MOTOR-STOP	009/1 009/2 009/3 010/1
		010/2 010/3 010/4 10A/0
		10A/1 10A/2 10A/3
552.48072	GEAR UNIT LEVER KNOB	08A/0 08A/1 08A/2 08A/3
		08A/4
552.48241	PLUG D-25	01A/0 01A/1 01A/2
552.48283	REVERSER CONTROL LEVER	010/0 010/1 010/2 010/3
		010/4 10A/0 10A/1 10A/2
		10A/3
552.48284	DIFFERENTIAL LOCK LEVER	010/0 010/1 010/2 010/3
		010/4 10A/0 10A/1 10A/2
		10A/3
552.48378	PTO STOP RING	011/0 011/1 011/2
552.48379	PTO BALL-JOINT	011/0 011/1 011/2 011/3
		011/4 011/5 012/0 012/1
		012/2 012/3 08A/0 08A/1
		08A/2 08A/3 08A/4
552.49668	SHEATH PASS-THROUGH	008/2 008/3 008/4
552.50305	GAS CONTROL	009/0 009/1

codice	denominazione	tavola
552.50310	GAS CONTROL LEVER	009/0 009/1
552.51686	SUPPORT FOR LEVER	008/0 008/1 008/2 008/3
		008/4
552.51688	REGULATING LEVER	008/0 008/1 008/2 008/3
		008/4
552.57249	GEARBOX BALL-JOINT 3+2	012/0 012/1 012/2 012/3
552.57255	PTO 3+2 STOP	012/0 012/1 08A/0
552.57313	REVERSER LEVER ROLLER	011/3 011/4 011/5 012/2
		012/3 08A/1 08A/2 08A/3
		08A/4
552.57321	PTO STOP FOR 2-WHEEL TRACTOR	011/3 011/4 011/5 012/2
		012/3 08A/1 08A/2 08A/3
		08A/4
552.57540	INSTRUMENT PANEL	001/0 001/1 001/2
561.19937	BATTERY SUPPORT	01B/0
561.37370	BATTERY CLAMPING BRACKET	01B/0 01B/1 01B/2 01D/0
561.42110	COUPLING PIN	01A/0 01A/1 01C/0
561.42828	ENGINE CLAMP	01D/0
561.43059	SPACER	006/0
561.43360	CONTROL ROD	011/0 011/1 011/2 011/3
		012/0
561.43794	TOP COUPLING FOR IM 300	01A/0
561.43865	HALF AXLE RING	007/0
561.43878	CLUTCH BRACKET STOP	03A/0 03A/1 03A/2
561.43880	RELEASE LEVER	007/0 07A/0 07B/0
561.43883	DIFFERENTIAL SHEATH STOP.	007/0 07A/0 07B/0
561.47432	PAD HOLDER 1IM350	01A/0
561.47433	PAD HOLDER AT330	01A/0 01A/1
561.47434	PAD HOLDER 6LD360/400	01A/0 01A/1
561.47437	SPACER	01A/0 01A/1
561.47499	EXHAUST MANIFOLD GUARD	01C/0
561.47520	SIDE BOX COVER	003/0 003/1 003/2 003/3
		03A/0 03A/1 03A/2
561.47560	REVERSE LEVER STOP	08A/0 08A/1 08A/2 08A/3
		08A/4
561.47574	REVERSE BLOCK	08A/0 08A/1 08A/2 08A/3
		08A/4
561.47641	HANDLEBAR "U" BOLT	08A/0 08A/1 08A/2 08A/3
		08A/4
561.47646	GEAR CONTROL ROD	08A/0 08A/1 08A/2 08A/3
		08A/4
561.47648	PTO CONTROL ROD	08A/0 08A/1 08A/2 08A/3
		08A/4
561.47655	DISK CLUTCH LEVER	009/0 009/1 009/2 009/3
		010/0 010/1 010/2 010/3
		010/4 10A/0 10A/1 10A/2
		10A/3
561.47664	REVERSER GEAR Z-12	08A/0 08A/1 08A/2 08A/3
		08A/4
561.47672	GUIDE PIN	08A/0 08A/1 08A/2 08A/3
		08A/4
561.47703	REVERSER GEAR	08A/0 08A/1 08A/2 08A/3
		08A/4
561.47711	M/S SPRING RETAINER PIN	009/0 009/1 009/2 009/3
		010/0 010/1 010/2 010/3
		010/4 10A/0 10A/1 10A/2
		10A/3
561.47845	SELF-COOLING CLUTCH LEVER	002/0 002/1 002/2 002/3
561.47923	LONG STOP BRACKET	003/0 003/1 003/2 003/3
		007/0 03A/0 03A/1 03A/2
561.48031	BONNET PAD MOUNT. ALN330	01A/0 01A/1
561.48037	MOTOR STOP LEVER STOP	009/0 009/1 009/2 009/3
		010/0 010/1 010/2 010/3
		010/4 10A/0 10A/1 10A/2
		10A/3
561.48184	HALF-AXLE RING	07A/0
561.48218	BRAKE DRUM .D 136.	13A/0 13A/1
561.48285	PIN	010/0 010/1 010/2 010/3
		010/4 10A/0 10A/1 10A/2

AGROSAL d.o.o.

codice	denominazione	tavola
		10A/3
561.48286	DRILLED PIN	010/0 010/1 010/2 010/3
		010/4 10A/0
561.48287	PIN	010/0 010/1 010/2 010/3
		010/4 10A/0 10A/1 10A/2
		10A/3
561.48470	LEVER	10A/0 10A/1 10A/2 10A/3
561.48672	STOP PLATE	01C/0
561.49590	BATTERY TIE ROD L=200	01B/0 01B/1 01B/2 01D/0
561.49644	SPACER	07B/0
561.49645	COVER	07B/0
561.49655	CONTROL ROD	011/0 011/1 011/2
561.50358	PLATE	009/0 009/1
561.50361	LEVER SPACER	009/0 009/1 009/2 009/3
		010/0 010/1 010/2 010/3
		010/4 10A/0 10A/1 10A/2
		10A/3
561.52242	PAD SUPPORT	01A/2 01A/3
561.56081	PLATE FOR BUMPER	01C/0
561.56152	MUFFLER PROTECTION VANG.14HP	01C/0
561.56940	HANDLEBAR U BOLT	008/0 008/1 008/2 008/3
		008/4
561.56948	STEERING COLUMN SPRING STOP	008/4
561.56968	LEVER STOP F/HANDLEBAR RELEASE	08A/3 08A/4
561.57234	GEAR SELECTOR 1+1	011/0 011/1 011/2 011/3
		011/4 011/5
561.57236	GEAR SELECTOR (3+2)	012/0 012/1 012/2 012/3
561.57239	GEAR SELECTOR	08A/0 08A/1 08A/2 08A/3
		08A/4
561.57245	GEAR CONTROL LEVER STOP	008/0 008/1 008/2
561.57248	GEAR CONTROL LEVER	012/0 012/1 012/2 012/3
561.57257	LEVER SPACER	012/0 012/1 012/2 012/3
561.57258	CONTROL ROD SPACER	008/0 008/1
561.57260	LEVER PTO	011/0 011/1 011/2 012/0
		012/1
561.57267	LEVER PTO LONG	08A/0
561.57271	GEAR CONTROL LEVER SHORT	011/0 011/1 011/2 011/3
		011/4 011/5 08A/0 08A/1
		08A/2 08A/3 08A/4
561.57274	BLOCK	012/0 012/1 012/2 012/3
561.57275	CONTROL ROD	012/0
561.57282	PTO ROD FOR MC710/720 WITH AE	011/3 011/4 011/5
561.57283	GEAR LEVER FOR 710 ELECTRIC	011/4 011/5
561.57303	SPACER FOR LEVER	08A/0 08A/1 08A/2 08A/3
		08A/4
561.57311	SPEED ROD	012/1 012/2 012/3
561.57312	PTO ROD	012/1 012/2 012/3
561.57323	SHORT PTO LEVER	011/3 011/4 011/5
561.57324	LONG PTO LEVER	012/2 012/3 08A/1 08A/2
		08A/3 08A/4
561.57332	U-BOLT	010/2 010/3 010/4 10A/1
		10A/2 10A/3
561.57539	COUPLING PIN	001/0 001/1 001/2 01A/2
		01A/3
561.57555	TUBE D.9X1.25	001/0 001/1 001/2
561.57589	STOPPER SUPPORT FOR IM 359/RES	01A/1
561.57590	COVER HINGE	001/1 001/2 01A/2 01A/3
561.57603	BATTERY SUPPORT	01B/1 01B/2
561.57605	CROSSPIECE	01A/2
561.57606	CLUTCH STOP	03A/1 03A/2
561.57607	CLUTCH STOP SPACER	03A/1 03A/2
561.57614	HINGE	01A/2 01A/3
561.58943	WASHER 7X25X2	05A/2
563.43058	WHEEL SHAFT	006/0
563.47484	CLUTCH SHOULD. WASHER	002/2
563.47700	CAP D-8	008/0 008/1 008/2 08A/0
		08A/1 08A/2
563.49649	SHEATH STOP	13A/1
563.49782	KOHLER ENGINE KEY	002/2 002/3

codice	denominazione	tavola
563.50306	GAS CONTROL LEVER	009/0 009/1
563.51685	HANDLEBAR POSITION ROD	008/0 008/1 008/2 008/3
		008/4
563.56165	HONDA ENGINE KEY	002/3
563.56251	CLUTCH SHOULD.WASHER D=19.6	002/0 002/1 002/2 002/3
563.56328	SCRAPER RING THICKNESS=1.5	004/0 004/1 004/2 005/0
		005/1 005/2 05A/0 05A/1
		05A/2
563.56329	SCRAPER RING THICKNESS=1.6	004/0 004/1 004/2 005/0
		005/1 005/2 05A/0 05A/1
		05A/2
563.56330	SCRAPER RING THICKNESS=1.7	004/0 004/1 004/2 005/0
		005/1 005/2 05A/0 05A/1
		05A/2
563.56331	SCRAPER RING THICKNESS=1.8	004/0 004/1 004/2 005/0
		005/1 005/2 05A/0 05A/1
		05A/2
563.56348	SCRAPER RING	004/0 004/1 004/2 005/2
563.56924	CAP	008/3 008/4 08A/3 08A/4
564.43857	DIFFERENTIAL SPACER WASHER	007/0
564.43871	ROD	007/0 07A/0 07B/0
564.48183	CRINKLE SPACER	07A/0 07B/0
564.48196	FRONT COUPLE	07A/0 07B/0
564.56347	REVERSER GEAR	004/0 004/1 004/2 005/0
		005/1 005/2 05A/0 05A/1
		05A/2
564.56350	GEAR PIN Z=15	004/0 004/1 004/2
564.56351	GEAR PIN	005/0 005/1 005/2 05A/0
		05A/1 05A/2
564.56475	WORM SCREW 2 START	004/0 004/1 004/2 005/0
		005/1 005/2
564.56476	WORM SCREW 2 START RIGHT	05A/0 05A/1 05A/2
564.56479	WORM SCREW 4 START , LH	05A/2
564.58942	3-FINGER COUPLE D=25	05A/2
571.48509	GUARD BOTTOM PLATE D=32	08A/0 08A/1 08A/2 08A/3
		08A/4
571.50312	SPRING	009/0 009/1
580.02429	TERMINAL SCREW M 5	007/0 009/0 009/1 009/2
		009/3 010/0 010/1 010/2
		010/3 010/4 08A/0 08A/1
		08A/2 08A/3 08A/4 10A/0
		10A/1 10A/2 10A/3
580.02538	GAS CONTROL LEVER	009/0 009/1 009/2 009/3
		010/0 010/1 010/2 010/3
		010/4 10A/0 10A/1 10A/2
		10A/3
580.20258	GEAR RELEASE SPRING	011/4 011/5
580.26321	LEVER RETURN SPRING	08A/0 08A/1 08A/2 08A/3
		08A/4
580.27230	DUST SEAL RING	08A/3 08A/4
580.42059	SPRING FOR BALL	009/0 009/1
580.42067	CABLE TO GAS SHEATH	010/0 010/1 010/2 010/3
		010/4
580.42111	PAD FOR BONNET COUPLING	001/0 001/1 001/2 01A/2
		01A/3
580.42131	RUBBER PAD D 36	01C/0
580.42133	BONNET CABLE L 1500	01C/0
580.42167	SHEATH END	007/0 008/3 008/4 009/0
		009/1 009/2 009/3 010/0
		010/1 010/2 010/3 010/4
		08A/0 08A/1 08A/2 08A/3
		08A/4 10A/0 10A/1 10A/2
		10A/3 13A/1
580.42200	CLAMPING SCREW M 6	010/0 010/2 010/3 010/4
		13A/0 13A/1
580.42202	ADJUSTING SCREW M 8	009/0 009/1 009/2 009/3
		010/0 010/1 010/2 010/3
		010/4 10A/0 10A/1 10A/2
		10A/3

BCS

700 serie 94

INDICE DEI CODICI

PART NUMBER INDEX
INDICE DE LOS CODIGOS
INDEX DES REFERENCES
INDEX DER TEILNUMMERN

IC5 Rev. 1

1/2004

AGROSAL d.o.o.

codice	denominazione	tavola
580.42219	SPRING	008/0 008/1 008/2 008/3
		008/4
580.42486	GAS CABLE & SHEATH	010/3
580.42746	RIM 5 J 15" .CAR.VAR.	013/2
580.43031	RUBBER BUMPER USA	01B/0
580.43032	SHOCKPR. BEARING SERIES BAT.	01B/0 01D/0
580.43034	ELECTR. START HARNESS MC 715	01B/0
580.43036	RECTIFIER	01B/0 01B/1
580.43053	PARALLEL PIN D 6X20	003/0 003/1 003/2 003/3
		03A/0 03A/1 03A/2
580.43086	PAD	004/0 004/1 004/2 005/0
		005/1 005/2 05A/0 05A/1
		05A/2
580.43117	COVER SEAL	003/0 003/1 003/2 003/3
		03A/0 03A/1 03A/2
580.43176	SPRING	011/0 011/1 011/2 011/3
		012/0 012/1 012/2 012/3
		08A/0 08A/1 08A/2 08A/3
		08A/4
580.43216	CLUTCH SHEATH & CABLE	10A/0 10A/1 10A/2 10A/3
580.43219	GAS CABLE & SHEATH L = 1680	10A/0 10A/1 10A/2 10A/3
580.43250	DISK WHEEL 2.50-8	013/0 013/1 013/2
580.43253	SHEATH & CABLE L=930 INVERT.	10A/0
580.43855	SEAL	007/0 07A/0
580.43874	SPRING	007/0 07A/0 07B/0
580.43881	SPRING	007/0 07A/0 07B/0
580.44804	RIM 5JA-12" VAR.TREAD	013/0 013/1 013/2
580.45804	WARNING LIGHT COBO 4706953	01B/2 01D/0
580.45805	START SWITCH COBO 14110100/1	01D/0
580.45806	FLAT KEY COBO 14109108	01D/0
580.45807	LOCK COVER OLSA 15651000	01D/0
580.46901	STICKER	014/0 014/1
580.46902	STICKER	014/0 014/1
580.46903	STICKER	014/0 014/1
580.46909	STICKER	014/0 014/1
580.46910	STICKER	014/0 014/1
580.46912	STICKER	014/0 014/1 014/2
580.46913	STICKER	014/0 014/1 014/2
580.47410	COMPLETE BONNET 737	01A/0 01A/1
580.47438	RUBBER PAD	01A/0 01A/1
580.47462	GAS CTRL SHEATH & CABLE	009/0 009/1
580.47568	UNIFIED MOTOR-STOP HARNESS	009/0 009/1 009/2 010/0
		010/1 010/2 010/3 10A/0
		10A/1 10A/2
580.47624	HANDLEBAR RELEASE SPRING	08A/0 08A/1 08A/2 08A/3
		08A/4
580.47629	SHEATH & CABLE L=1080 W/CORE	009/0 009/1 009/2 009/3
580.47647	SHEATH & CABLE L=1280 W/CORE	10A/0 10A/1 10A/2 10A/3
580.47649	HOOK	10A/0 10A/1 10A/2 10A/3
580.47671	INVERTER SPRING	08A/0 08A/1 08A/2 08A/3
		08A/4
580.47701	CAP SPRING	008/0 008/1 08A/0 08A/1
		08A/2 08A/3 08A/4
580.47702	STEER.COLUMN CABLE MC 737	08A/0 08A/1 08A/2 08A/3
		08A/4
580.47712	M/STOP SPRING COMPL.DIRECT	009/0 009/1 009/2 009/3
		010/0 010/1 010/2 010/3
		010/4 10A/0 10A/1 10A/2
		10A/3
580.47729	STEER.COLUMN STICKER MC	014/0 014/1 014/2 08A/0
		08A/1 08A/2 08A/3 08A/4
580.48000	KNOB D=27 GLISSA	009/0 009/1 009/2 009/3
		010/0 010/1 010/2 010/3
		010/4 10A/0 10A/1 10A/2
		10A/3
580.48002	CLAMPING SCREW M4	10A/0 10A/1 10A/2 10A/3
580.48009	STOP SWITCH	009/0 009/1 009/2 009/3
		010/0 010/1 010/2 010/3
		010/4 10A/0 10A/1 10A/2

codice	denominazione	tavola
		10A/3
580.48012	GAS SHEATH & CABLE - 1850	009/2 009/3 010/3 010/4
		10A/0 10A/1 10A/2
580.48124	ELECT. START HARNESS	01B/0 01B/1
580.48214	BLOCK	13A/0 13A/1
580.48215	SPRING	13A/0 13A/1
580.48330	RIM 3.50 D 10" VAR.TREAD COMP	013/0 013/1 013/2
580.48671	SPRING LOADED LINK-ROD	01C/0
580.48674	LONG HOOK	01C/0
580.49501	MOTOR STOP CABLE-SHEATH	10A/0 10A/1 10A/2 10A/3
580.49505	SHEATH CABLE	010/0 010/1 010/2 010/3
		010/4
580.49541	ELECT. START HARNESS	01D/0
580.49545	BONNET	01C/0
580.49582	STICKER	01D/0
580.49646	COVER SEAL	07B/0
580.49663	SHEATH CABLE	10A/0 10A/1 10A/2 10A/3
580.49830	CAP SPRING	08A/3 08A/4
580.50345	SPRING FOR LEVER	009/0 009/1 009/2 010/0
		010/1 010/2 010/3 10A/0
		10A/1 10A/2 10A/3
580.51601	GAS STICKER FOR B&S ENGINE	009/0 009/1
580.51670	LEVER HOOK	009/0 009/1 009/2 009/3
		010/0 010/1 010/2 010/3
		010/4 10A/0 10A/1 10A/2
		10A/3
580.52304	M/STOP HARNESS MF	009/0 009/1 009/2
580.56154	SPRING FOR HONDA G160 THROTTLE	009/2 009/3 010/3 010/4
580.56391	PTO SLIDING SPRING	004/0 004/1 004/2 005/0
		005/1 005/2 05A/0 05A/1
		05A/2
580.56993	SPRING FOR CLUTCH LEVER	009/3 010/4 10A/3
580.56918	STEERING COLUMN SPRING	008/2 008/3 008/4
580.56942	HANDLEBAR RELEASE SPRING	008/0 008/1 008/2 008/3
		008/4
580.56991	BODYGUARD CAP SUPPORT	008/3 008/4 01A/2
580.57232	SPRING FOR GEARSTICK	011/0 011/1 011/2 011/3
		011/4 011/5 012/0 012/1
		012/2 012/3 08A/0 08A/1
		08A/2 08A/3 08A/4
580.57263	CLAMP.SCREW M5 F/ ACME MOTORS	010/0 010/1 010/2 010/3
		010/4 10A/0 10A/1 10A/2
		10A/3
580.57264	GAS SHEATH & CABLE L=1450	009/0 009/1 009/2 009/3
580.57266	SHEATH SUPPORT	008/1 008/2 008/3 008/4
580.57273	INVERTER SPRING MC720/730	012/0 012/1 012/2 012/3
580.57284	STEER.COL.REL.SHEATH & CABLE	010/0 010/1 010/2 010/3
		010/4
580.57285	SHEATH & CABLE L=1130 (CORE)	010/0 010/1 010/2 010/3
		010/4
580.57286	INVERT.SHEATH & CABLE L=1010	010/0 010/1
580.57287	DIFFER.SHEATH & CABLE L=1080	010/0 010/1 010/2 010/3
		010/4
580.57288	GAS SHEATH & CABLE L=1380	010/0 010/1 010/2 010/3
		010/4
580.57328	CABLE AND SHEATH L=900	10A/1 10A/2 10A/3
580.57329	SHEATH & CAB. (L=980) INVERT.	010/2 010/3 010/4
580.57337	CABLE AND SHEATH L=1680	10A/2 10A/3
580.57342	CABLE AND SHEATING (L=1330)GAS	010/3 010/4
580.57343	CABLE AND SHEATH (L=1350)	10A/2 10A/3
580.57384	CABLE	01B/1 01B/2
580.57386	MOTOR HARNESS	01B/1 01B/2
580.57401	MOTOR STOP CABLES	009/3 010/4 10A/3
580.57541	STEER.COLUMN COWLING	001/0 001/1 001/2
580.57542	COMPL. CENTRAL COWLING BLUE	001/0 001/1 001/2
580.57545	MOTOR BONNET	001/0 001/1 001/2 01A/2
		01A/3
580.57554	BONNET STICKER MC	001/0 001/1 001/2 01A/2
		01A/3

AGROSAL d.o.o.

codice	denominazione	tavola
580.57610	BATTERY COVER	01B/1 01B/2
580.57611	ANTISHOCK BATTERY SET	01B/1 01B/2
580.57613	ENGINE COVER	01A/2 01A/3
580.57676	STICKER	014/0 014/1 014/2
580.57677	STICKER	014/0 014/1 014/2
580.57678	STICKER	014/0 014/1 014/2
580.57679	STICKER	014/0 015/0 015/1
580.57680	STICKER	014/0 015/0 015/1
580.57681	STICKER	014/0 015/0 015/1
580.57682	STICKER	014/0 015/0 015/1
580.57683	STICKER	014/0 015/0 015/1
580.57688	STICKER	014/0 014/1 014/2
580.57704	STICKER	014/0 014/1 014/2 08A/0
		08A/1 08A/2 08A/3 08A/4
580.57708	STICKER	014/0 015/0 015/1
580.57724	STICKER, INSTRUCTION MANUAL	014/0 014/1 014/2
580.57726	STICKER	015/0 015/1
580.57727	STICKER	01C/0
580.57734	740 COVER STICKER	015/1
580.57767	STICKER "DANGER FOR REFUELING"	014/2
580.57768	STICKER "WARNING FOR TEMP."	014/2
580.57770	CLUTCH STICKER	014/2
580.57772	STICKER MOTOR STOP + STARTER	014/2
581.00052	BOSCH RELAY 0332002160	01B/0
581.47704	ADJUSTING SCREW M.6	08A/0 08A/1 08A/2 08A/3
		08A/4
581.50313	BARREL	009/0 009/1 009/2 009/3
		010/0 010/1 010/2 010/3
		010/4 10A/0 10A/1 10A/2
		10A/3
590.15425	CAP WITH MEASURING ROD	003/0 003/1 003/2 003/3
		03A/0 03A/1 03A/2
590.43063	WHEEL HUB WITH STUD	006/0
590.47417	BUMPER COMPL.	01A/0 01A/1
590.47422	BUMPER COMPL. 6LD360/400	01A/0 01A/1
590.47441	TOP BONNET STOP	01A/0 01A/1
590.47445	BONNET COUPLING BRACKET	01A/0 01A/1
590.47608	WIDE STAND. HANDLEBAR COMPL.	10A/0
590.47610	COMPL. STEERING COLUMN	08A/0 08A/1 08A/2 08A/3
		08A/4
590.47620	HANDLEBAR REL. LEVER COMPL.	08A/0 08A/1 08A/2 08A/3
		08A/4
590.47625	STEER.COL. LOCK LEVER COMPL.	08A/0 08A/1 08A/2 08A/3
		08A/4
590.47666	INVERT.POS.CONTR. LEVER COMP.	08A/0 08A/1 08A/2 08A/3
		08A/4
590.47688	STEER.COL.COUPL.W/MUFF.CH 15	08A/0 08A/1 08A/2
590.47708	BATTERY SUPPORT	01B/0
590.47709	STOP SWITCH SUPPORT COMPL.	009/0 009/1 009/2 009/3
		010/0 010/1 010/2 010/3
		010/4 10A/0 10A/1 10A/2
		10A/3
590.48042	BATTERY SUPPORT COMPL.	01B/0
590.48122	BATTERY SUPPORT	01B/0
590.48199	DIFFERENTIAL 737	07A/0
590.48200	HALF-DISK LEVER COMPL.	13A/0 13A/1
590.48208	HALF-DISK PIN COMPL.	13A/0 13A/1
590.48469	DOUBLE LEVER COUPLING	10A/0 10A/1 10A/2 10A/3
590.49515	BOTTOM COUPLING	01C/0
590.49550	BATTERY CASING	01D/0
590.49637	DIFFERENTIAL COMPL. FOR 745	07B/0
590.51682	HANDLEBAR COLUMN	008/0 008/1 008/2 008/3
		008/4
590.52040	BUMPER	01C/0
590.56056	BUMPER A220 COMPL.FOR MC 720	001/0 001/1 001/2
590.56062	BUMPER IM/ALN COMPL.FOR MC720	001/0 001/1 001/2 01A/2
		01A/3
590.56066	BUMPER A220 COMPL.FOR MC 710	001/0 001/1 001/2
590.56067	BUMPER B&S5HP COMPL.FOR MC710	001/0 001/1 001/2

codice	denominazione	tavola
590.56073	BUMPER COMPL. FOR 15LD315	001/0 001/1 001/2 01A/2
		01A/3
590.56087	BUMPER	001/1 001/2
590.56091	BUMPER	01A/2
590.56108	BUMPER	01A/2 01A/3
590.56258	CLUTCH FORK	01B/1 01B/2
590.56365	PTO GEAR COMPL.	005/0 005/1 005/2 05A/0
		05A/1 05A/2
590.56375	GEAR SHAFT COMPL.	004/0
590.56378	GEAR SHAFT COMPL.	004/1 004/2
590.56380	DOUBLE GEAR COMPL.	005/0
590.56383	TRIPLE GEAR	05A/1 05A/2
590.56384	DOUBLE GEAR COMPL.	005/1 005/2
590.56385	TRIPLE GEAR COMPL.	05A/0
590.56900	HANDLEBAR SUPPORT COMPL.	011/0 011/1 011/2 011/3
		011/4 011/5
590.56905	OIL SUMP COMPL.	011/0 011/1 011/2 011/3
		011/4 011/5
590.56909	COMPLETE SLEEVE SUPPORT	008/3
590.56911	2-WH.TRACT.GUIDE SUPPORT	008/2
590.56912	2-WH.TRACT.STEERING COLUMN	008/2 008/3 008/4
590.56920	HANDLEBAR SUPPORT	012/3
590.56935	HANDLEBAR SELECT. LEVER COMPL.	008/0 008/1 008/2 008/3
		008/4
590.56949	STEER.COL.SUPP.COMPL.W/MUFF.	012/0 012/1 012/2
590.56952	SUPPORT FOR STEERING	008/4
590.56955	STEERING COLUMN MC COMPL.	008/0 008/1
590.56960	SUPPORT F/STEERING COLUMN CPLT	08A/3
590.56964	STEERING SUPPORT COMPL.	008/0 008/1
590.56969	STEERING COLUMN COUPLER	08A/3 08A/4
590.56970	STEERING COL. SUPPORT COMPL.	08A/0 08A/1 08A/2
590.56972	COMPL. STEERING COLUMN SUPPORT	08A/4
590.57085	HANDLEBAR 3+2 COMPL.	010/0 010/1
590.57105	HANDLEBAR WITH SILENTBLOC	009/0 009/1
590.57112	COMP.HANDLEBAR W/SILENTBLOCK	009/2 009/3
590.57115	UNIFIED WIDE HANDLEBAR	10A/1 10A/2 10A/3
590.57116	COMP.HANDLEBAR	010/2 010/3 010/4
590.57228	GEAR LEVER COMPL. MC710	011/0 011/1 011/2 011/3
		011/4 011/5
590.57251	GEAR LEVER (3+2) COMPL.	012/0 012/1 012/2 012/3
590.57268	INVERT.LEVER MC720/730 COMPL.	012/0 012/1
590.57277	INVERTER LEVER COMPL.	08A/0
590.57300	GEAR LEVER COMPL. FOR M3740	08A/0 08A/1 08A/2 08A/3
		08A/4
590.57317	REVERSER LEVER 2-WH.TRACT.	08A/1 08A/2 08A/3 08A/4
590.57319	REVERSER LEVER 720/730	012/2 012/3
590.57325	PTO STOP LEVER	011/3 011/4 011/5
590.57338	PTO STOP COMPL.	011/0 011/1 011/2
590.57547	BRACKET FOR BONNET COMPL.	001/0
590.57550	SUPPORT COMPL. 3+2	001/0 001/1 001/2
590.57556	SUPPORT COMPL.3+2 FOR 15LD315	001/0 001/1 001/2
590.57596	SUPPORT COMPL.	01A/2 01A/3
590.57599	SUPPORT COMPL.	01A/2
590.57601	COUPLING COMPL.	01A/2
590.57604	BATTERY BOX	01B/1 01B/2
590.57608	BATTERY BOX	01B/1 01B/2
590.57612	SUPPORT COMPL.	01A/2
590.57615	SUPPORT COMPL.	01A/2
592.43150	CONE CLUTCH D19	002/0
592.47884	CONE CLUTCH COMPL.	002/0 002/1 002/2 002/3
592.47907	CONE CLUTCH FOR KOHLER 8HP	002/0
592.47924	CONE CLUTCH MOTOR 12HP	002/0 002/2 002/3
592.47970	AUT.CLU.COM.B&S 11HP-VAN.12HP	002/2
592.47971	AUT.CONE CLUTCH COMP-2SPR.10CV	002/0 002/1 002/2 002/3
592.48175	RH DIFFER. COMPL.Z-49 W/REINF.	007/0
592.56252	CLUTCH D19 MOT.B&S5HPMC710	002/0 002/1 002/2
592.56265	COMPLETE CLUTCH D19, B&S ENG.	002/3
922.42460	COUPLE TWINNING RINGS	013/0 013/1 013/2
922.42474	PAIR STEEL CAGE WHEELS	013/0 013/1 013/2

AGROSAL d.o.o.

codice	denominazione	tavola
922.43682	PAIR STEEL CAGE WHEELS	013/0
922.43683	NARROW STEEL WHEELS (PAIR)	013/0
922.43685	WHEEL SPACERS CM. 6 (PAIR)	013/0 013/1 013/2
922.43686	PAIR OF WEIGHTS FOR 8" WHEELS	013/0 013/1 013/2
922.48715	PAIR OF WEIGHTS FOR 10"WHEELS	013/0 013/1 013/2
922.48720	PAIR OF WEIGHTS FOR 12" AND	013/0 013/1 013/2
922.48923	WEIGHT 12 KG. FOR CUTTER BAR	013/0 013/1 013/2
922.49993	STEEL CAGE WHEELS D. 58 (PAIR)	013/2
922.57779	CAGE WHEELS DIAM. 43 (PAIR)	013/1 013/2

codice	denominazione	tavola

AGROSAL d.o.o.

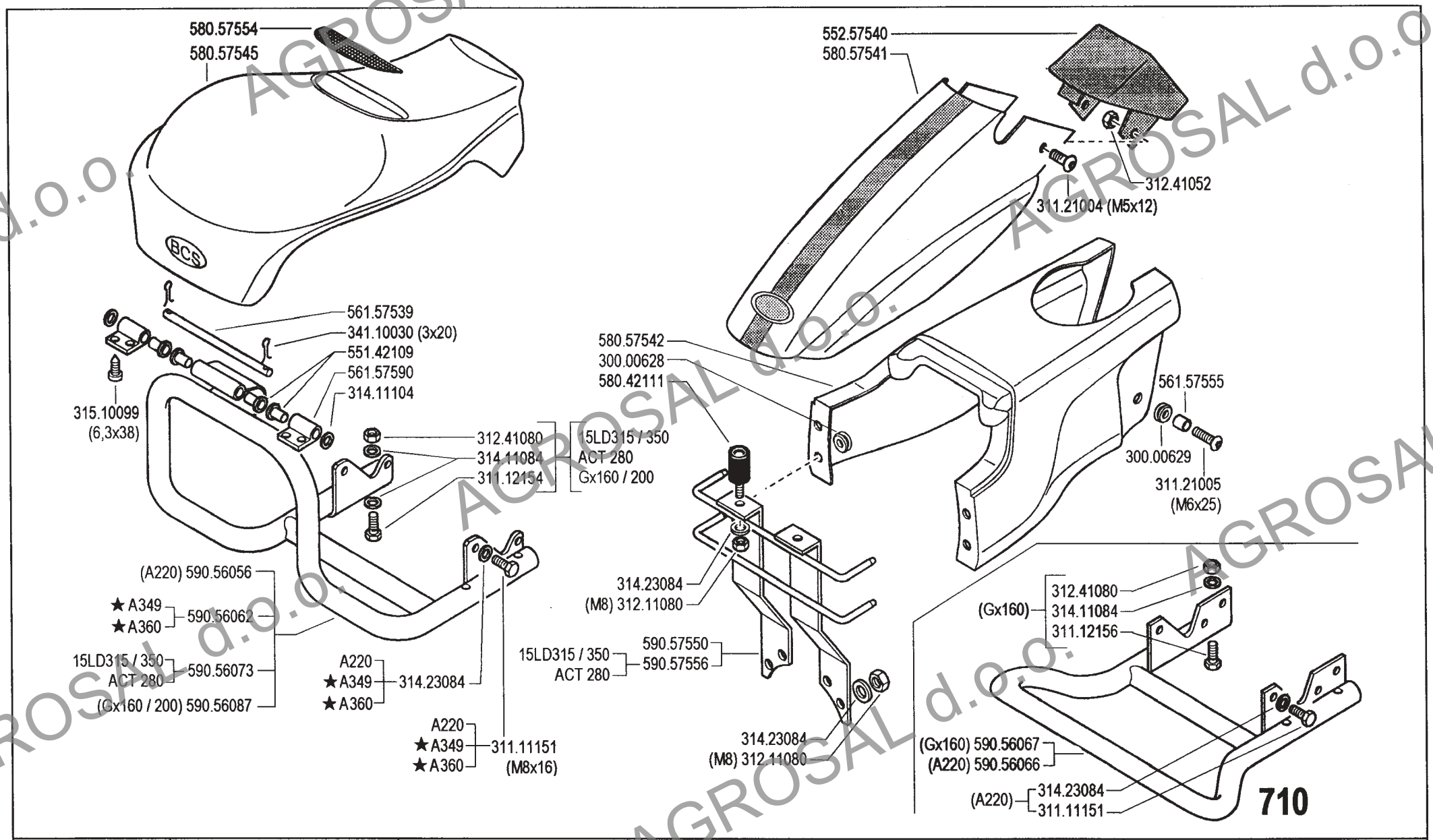

BCS	700 serie 94	**PROTEZIONI MOTORE (710-720-730)** ENGINE GUARDS PROTECCIONES MOTOR PROTECTIONS MOTEUR MOTOR SCHUTZ	DALLA MACCHINA DE LA MAQUINA DE LA MACHINE FROM THE MACHINE AB DER MASCHINE ★N.	AGGIORNAMENTO REVISION MISE A JOUR APLAZAMIENTO ANPASSUNG	01	Rev. 2
					3/2001	2ENNE

AGROSAL d.o.o.

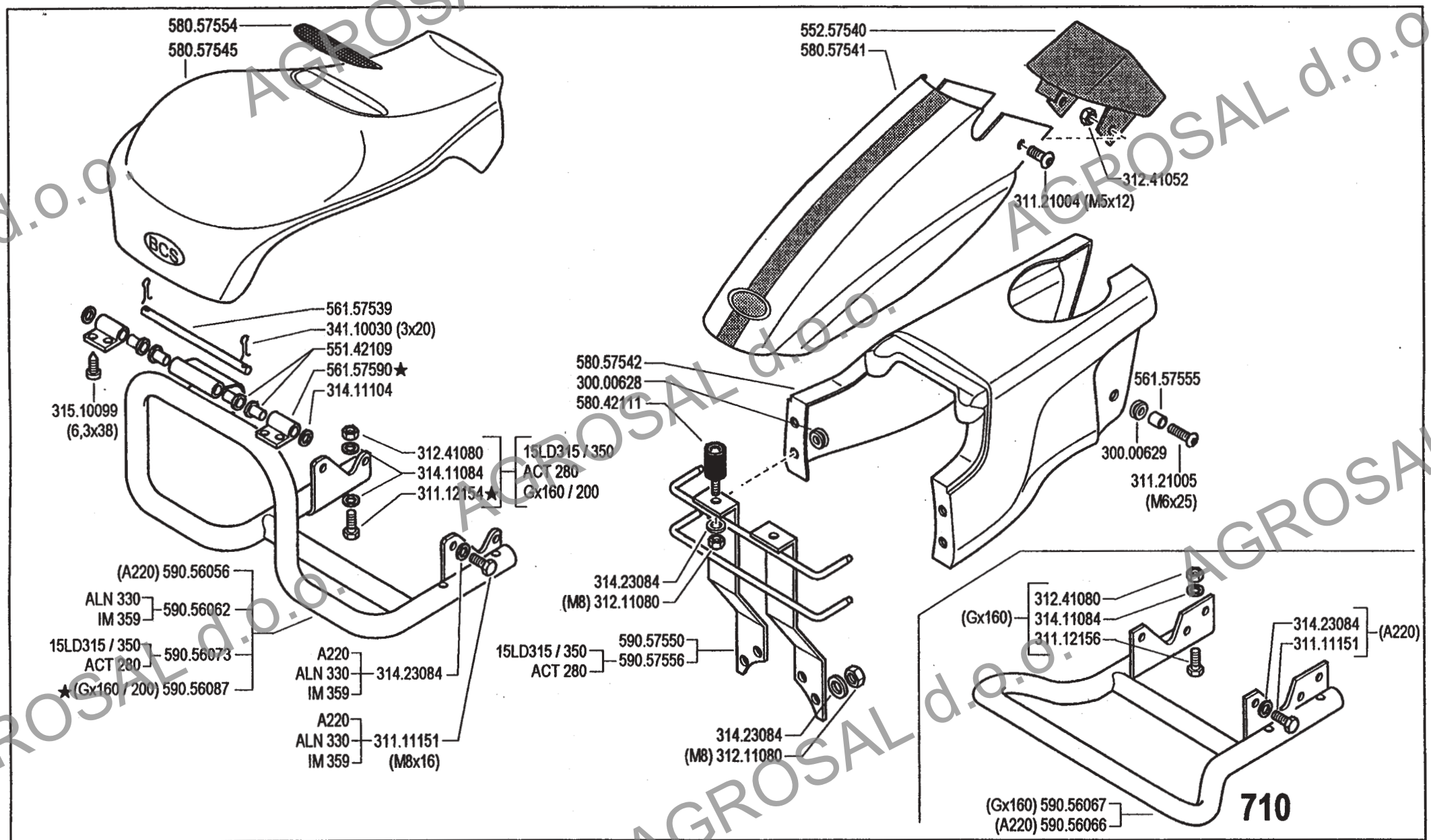

BCS	700 serie 94	**PROTEZIONI MOTORE (710-720-730)** ENGINE GUARDS PROTECCIONES MOTOR PROTECTIONS MOTEUR MOTOR SCHUTZ	DALLA MACCHINA DE LA MAQUINA DE LA MACHINE FROM THE MACHINE AB DER MASCHINE ★N.	AGGIORNAMENTO REVISION MISE A JOUR APLAZAMIENTO ANPASSUNG	01	Mod. 01 11/1999

AGROSAL d.o.o.

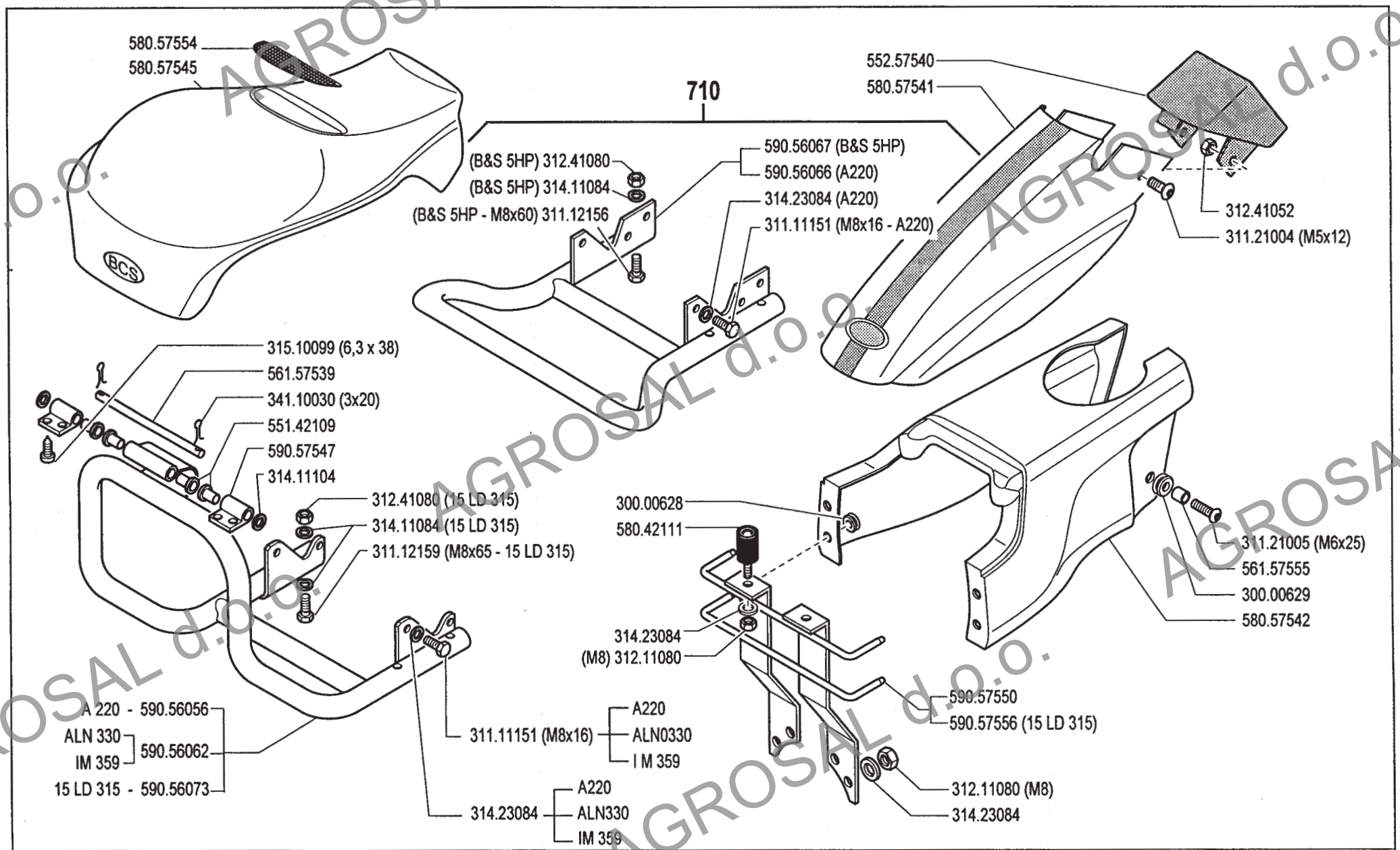

BCS	700 serie 94	CARROZZERIA CARROCERIA / BODY CAROSSERIE / KAROSSERIE	DALLA MACCHINA DE LA MAQUINA DE LA MACHINE FROM THE MACHINE AB DER MASCHINE N.		01.00 02.05.1994

AGROSAL d.o.o.

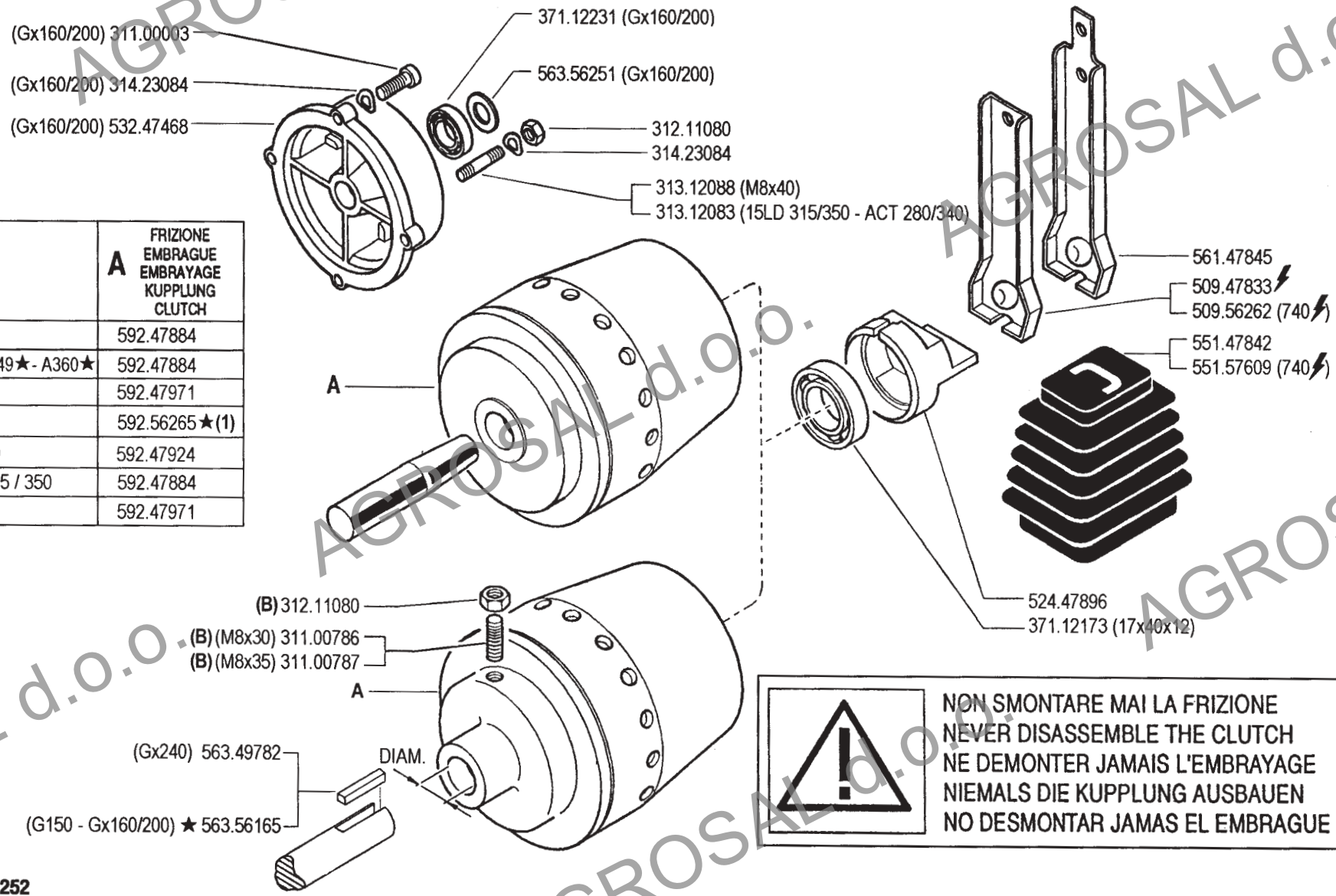

MOTORE ENGINE MOTEUR MOTOR MOTOR	A FRIZIONE EMBRAGUE EMBRAYAGE KUPPLUNG CLUTCH
Acme A220	592.47884
Acme ACT280 - A349★ - A360★	592.47884
Acme ACT 340	592.47971
Honda Gx160/200	592.56265★(1)
Lombardini 3LD510	592.47924
Lombardini 15LD315 / 350	592.47884
Yanmar L100AE	592.47971

(1) sostituisce **592.56252**

NON SMONTARE MAI LA FRIZIONE
NEVER DISASSEMBLE THE CLUTCH
NE DEMONTER JAMAIS L'EMBRAYAGE
NIEMALS DIE KUPPLUNG AUSBAUEN
NO DESMONTAR JAMAS EL EMBRAGUE

(B) serrare a 2 kgm

BCS

700 serie 94

FRIZIONE A CONO AUTOVENTILANTE

CLUTCH
EMBRAGUE

EMBRAYAGE
KUPPLUNG

DALLA MACCHINA
DE LA MAQUINA
DE LA MACHINE
FROM THE MACHINE
AB DER MASCHINE

★N.

AGGIORNAMENTO	
REVISION	
MISE A JOUR	
APLAZAMIENTO	
ANPASSUNG	

02 — Rev. 3

10/2001

2ENNE

AGROSAL d.o.o.

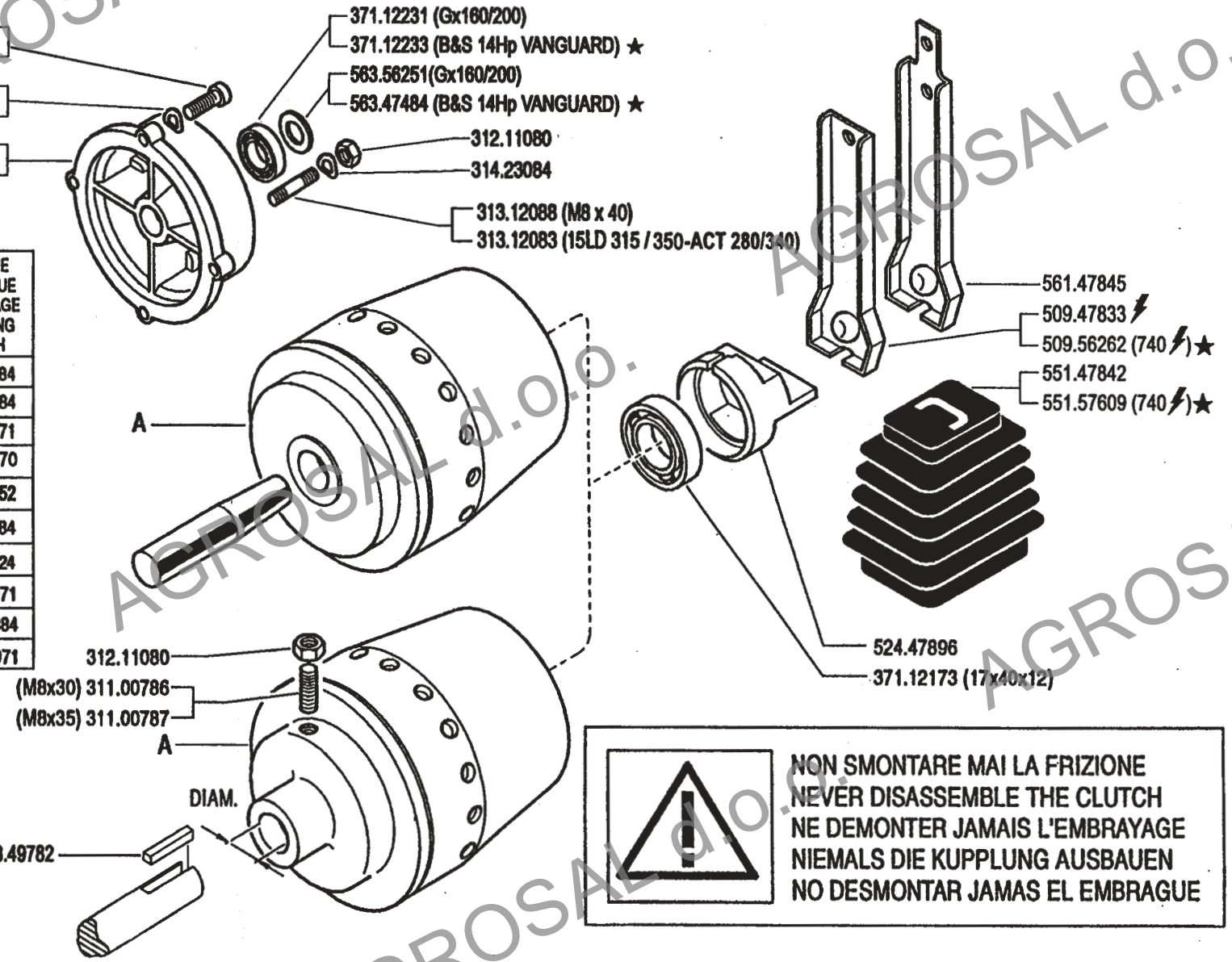

MOTORE ENGINE MOTEUR MOTOR MOTOR	A FRIZIONE EMBRAGUE EMBRAYAGE KUPPLUNG CLUTCH
Acme A220	592.47884
Acme ALN 330W - ACT 280 ★	592.47884
Acme AT 330W - ACT 340 ★	592.47971
Briggs & Stratton 14 Hp Vang. ★	592.47970
Honda Gx160/200 ★	592.56252
Intermotor IM 359	592.47884
Lombardini 3 LD 510 ★	592.47924
Lombardini 6 LD 435/400	592.47971
Lombardini 15 LD 315/350	592.47884
Yanmar L100 AE ★	592.47971

NON SMONTARE MAI LA FRIZIONE
NEVER DISASSEMBLE THE CLUTCH
NE DEMONTER JAMAIS L'EMBRAYAGE
NIEMALS DIE KUPPLUNG AUSBAUEN
NO DESMONTAR JAMAS EL EMBRAGUE

BCS

700 serie 94

FRIZIONE A CONO AUTOVENTILANTE

CLUTCH — EMBRAYAGE
EMBRAGUE — KUPPLUNG

DALLA MACCHINA
DE LA MAQUINA
DE LA MACHINE
FROM THE MACHINE
AB DER MASCHINE

★N.

AGGIORNAMENTO	02
REVISION	
MISE A JOUR	
APLAZAMIENTO	
ANPASSUNG	11/1999

Mod. 02

ZENNE

AGROSAL d.o.o.

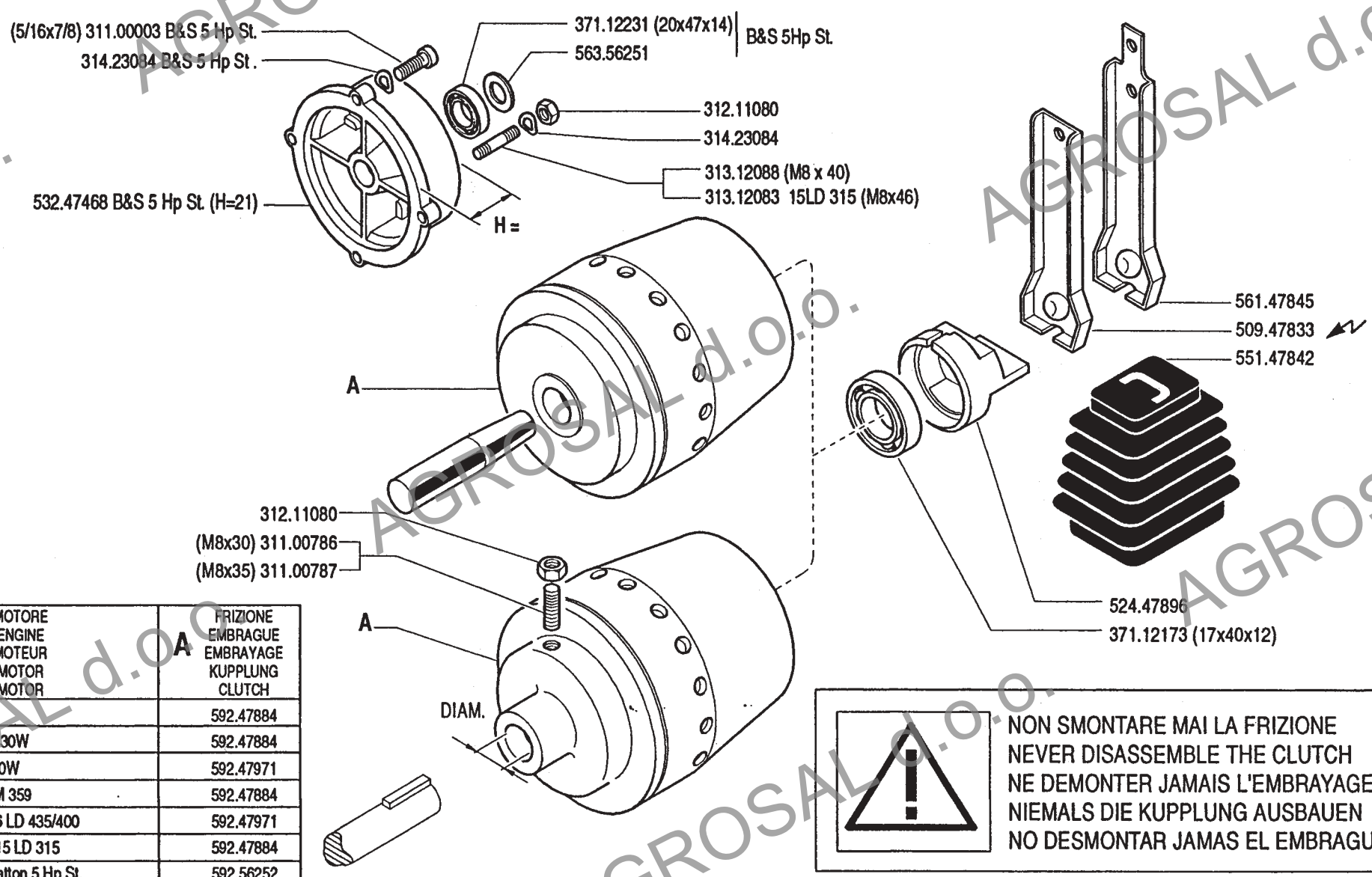

MOTORE ENGINE MOTEUR MOTOR MOTOR	A FRIZIONE EMBRAGUE EMBRAYAGE KUPPLUNG CLUTCH
Acme A220	592.47884
Acme ALN 330W	592.47884
Acme AT 330W	592.47971
Intermotor IM 359	592.47884
Lombardini 6 LD 435/400	592.47971
Lombardini 15 LD 315	592.47884
Briggs & Stratton 5 Hp St.	592.56252

NON SMONTARE MAI LA FRIZIONE
NEVER DISASSEMBLE THE CLUTCH
NE DEMONTER JAMAIS L'EMBRAYAGE
NIEMALS DIE KUPPLUNG AUSBAUEN
NO DESMONTAR JAMAS EL EMBRAGUE

BCS 700 serie 94

FRIZIONE A CONO AUTOVENTILANTE

EMBRAGUE — CLUTCH

EMBRAYAGE — KUPPLUNG

DALLA MACCHINA
DE LA MAQUINA
DE LA MACHINE
FROM THE MACHINE
AB DER MASCHINE

N.

AGGIORNAMENTO	02.01
REVISION	
MISE A JOUR	
APLAZAMIENTO	01.06.1995
ANPASSUNG	

AGROSAL d.o.o.

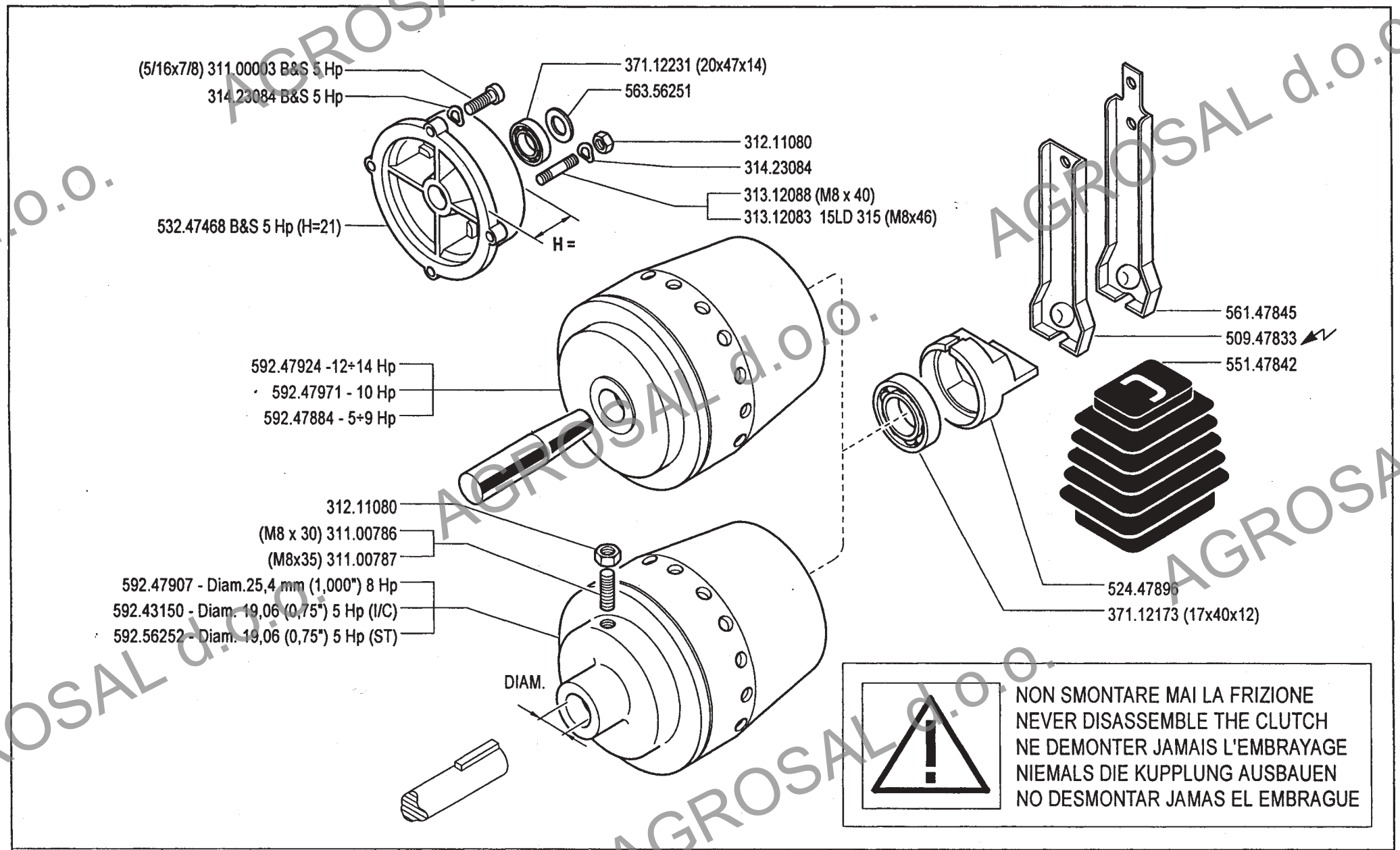

BCS 700 serie 94	FRIZIONE A CONO AUTOVENTILANTE EMBRAGUE / CLUTCH EMBRAYAGE / KUPPLUNG	DALLA MACCHINA DE LA MAQUINA DE LA MACHINE FROM THE MACHINE AB DER MASCHINE N.		02.00 02.05.1994

AGROSAL d.o.o.

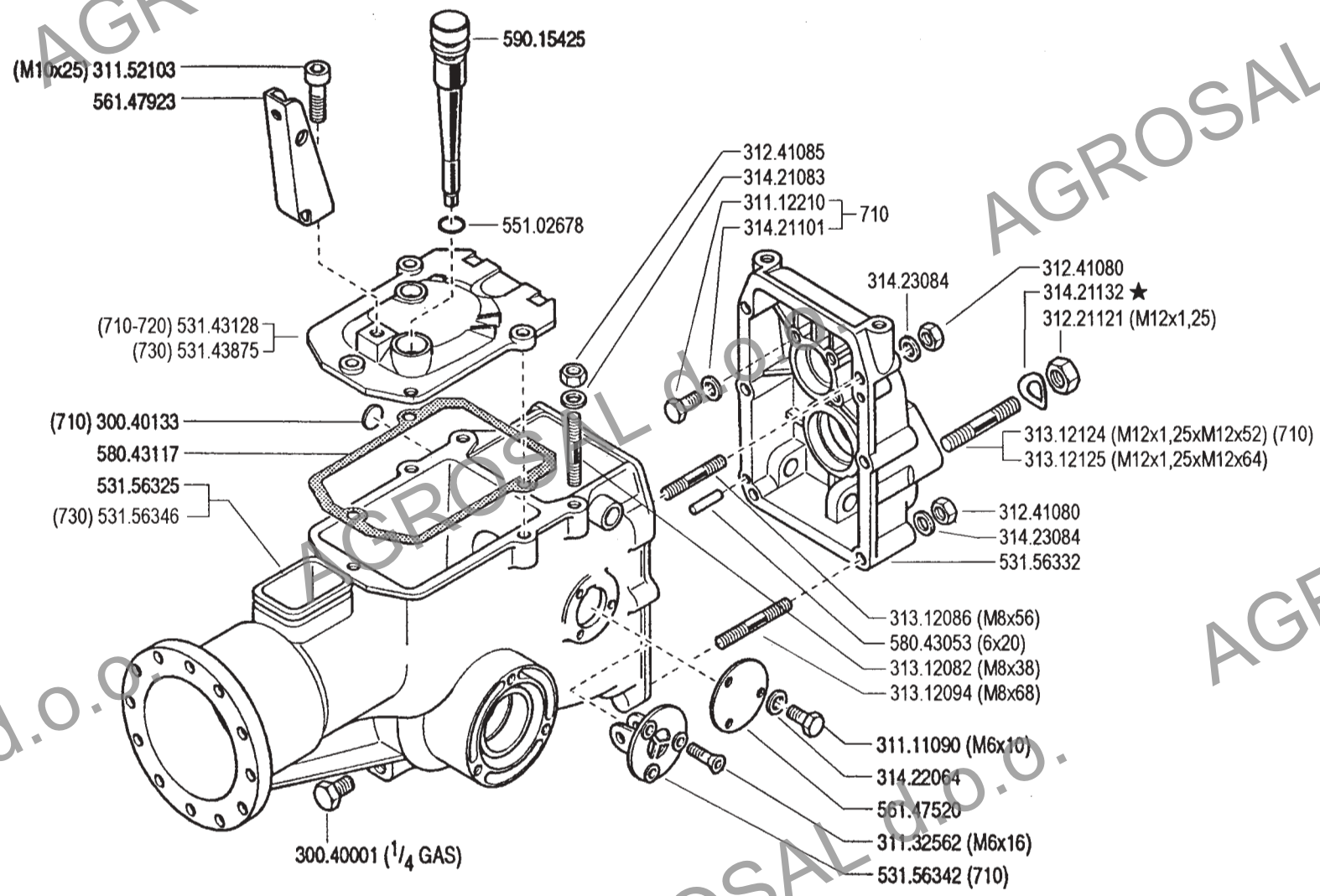

BCS	700 serie 94	**SCATOLA CAMBIO (710-720-730)** GEARBOX CAJA DE CAMBIO BOITE DE VITESSES WECHSELGETRIEBE	DALLA MACCHINA DE LA MAQUINA DE LA MACHINE FROM THE MACHINE AB DER MASCHINE ★N.	AGGIORNAMENTO REVISION MISE A JOUR APLAZAMIENTO ANPASSUNG	03 12/2002	Rev. 3

AGROSAL d.o.o.

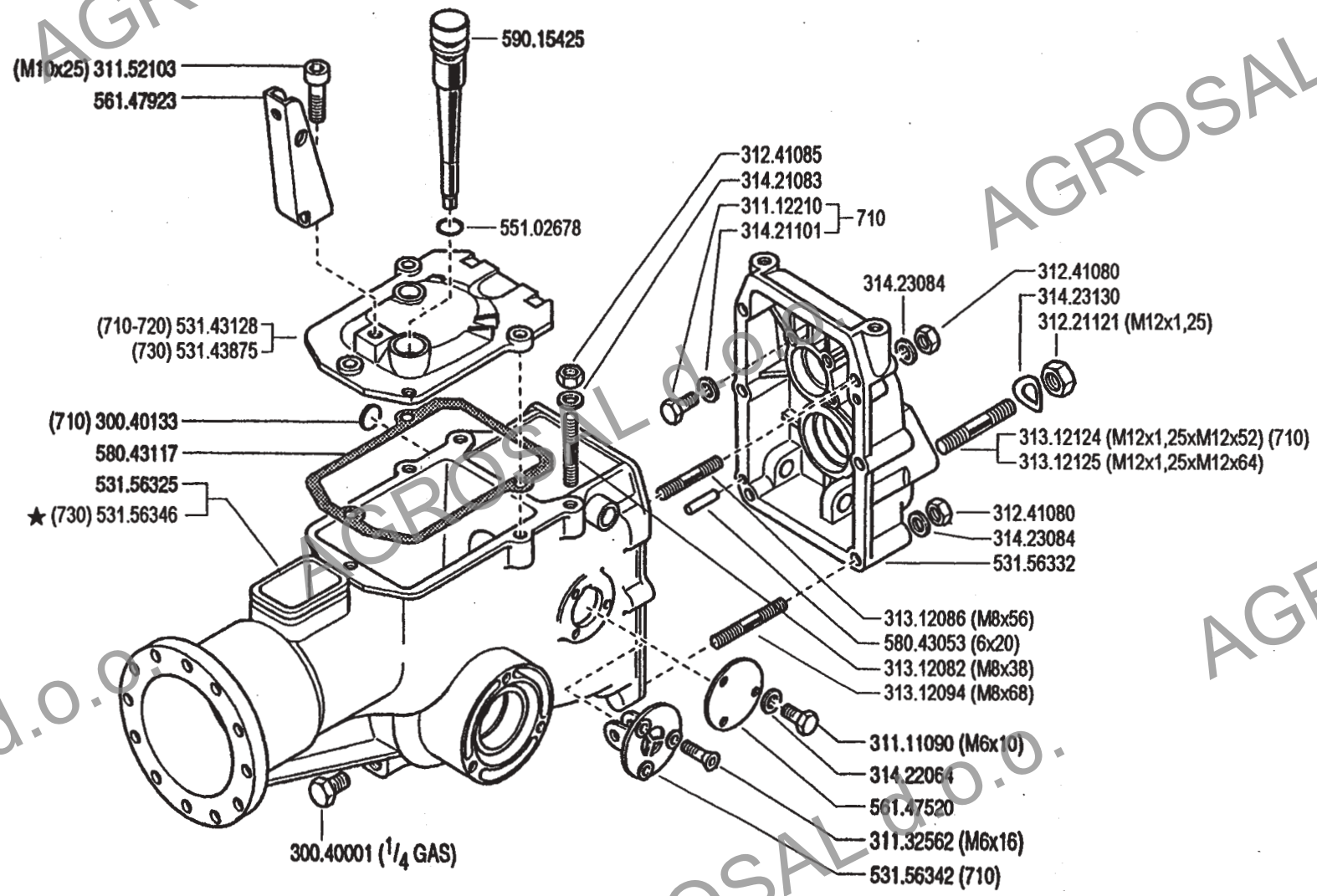

BCS	700 serie 94	SCATOLA CAMBIO (710-720-730) GEARBOX CAJA DE CAMBIO BOITE DE VITESSES WECHSELGETRIEBE	DALLA MACCHINA DE LA MAQUINA DE LA MACHINE FROM THE MACHINE AB DER MASCHINE ★N.	AGGIORNAMENTO REVISION MISE A JOUR APLAZAMIENTO ANPASSUNG	03	Mod. 02 11/1999

AGROSAL d.o.o.

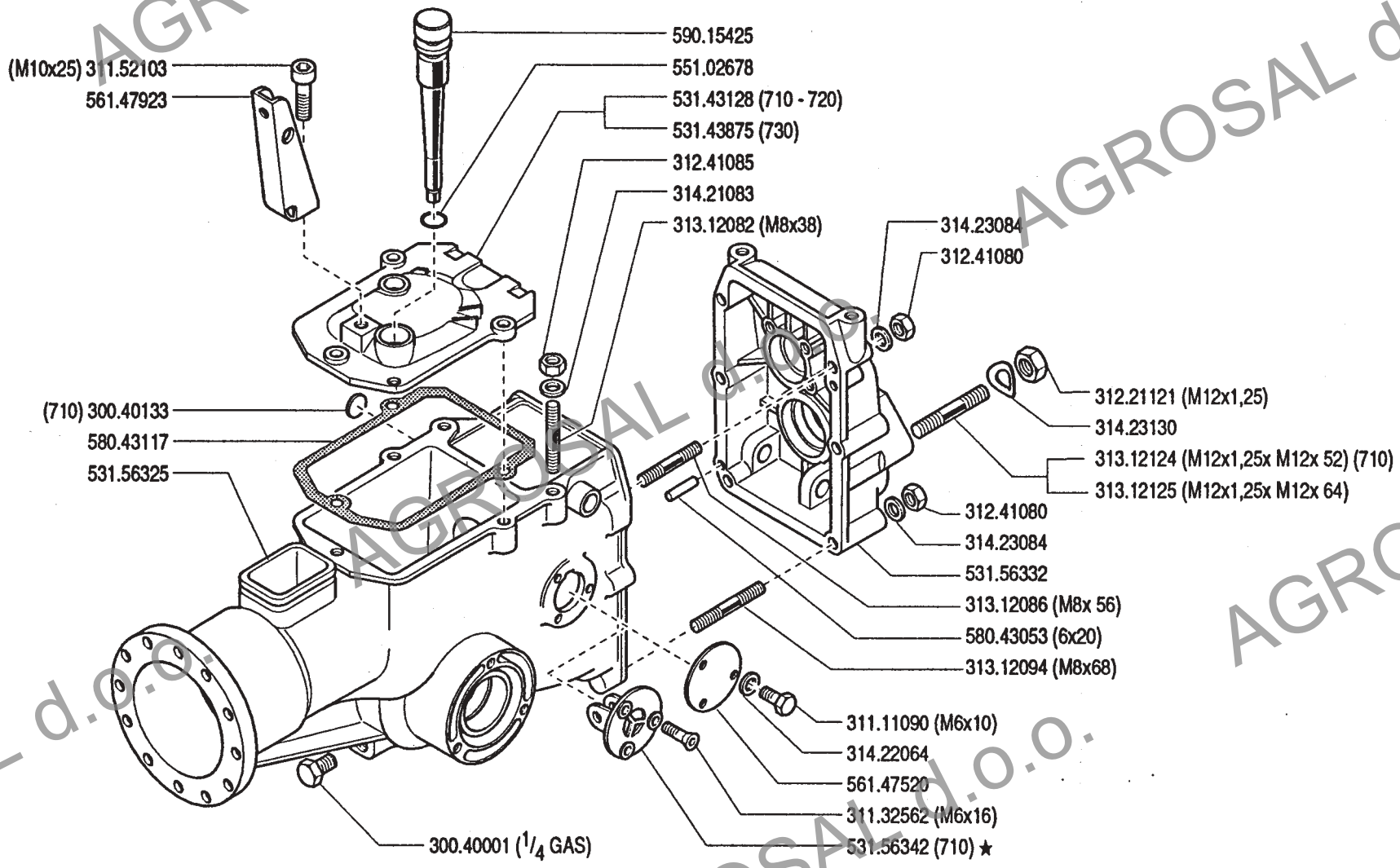

BCS 700 serie 94	SCATOLA CAMBIO (710 - 720 - 730) CAJA DE CAMBIO — GEARBOX BOITE DE VITESSES — WECHSELGETRIEBE	DALLA MACCHINA DE LA MAQUINA DE LA MACHINE FROM THE MACHINE AB DER MASCHINE ★ N.	102.479 (710)	03.01 01.06.1995

AGROSAL d.o.o.

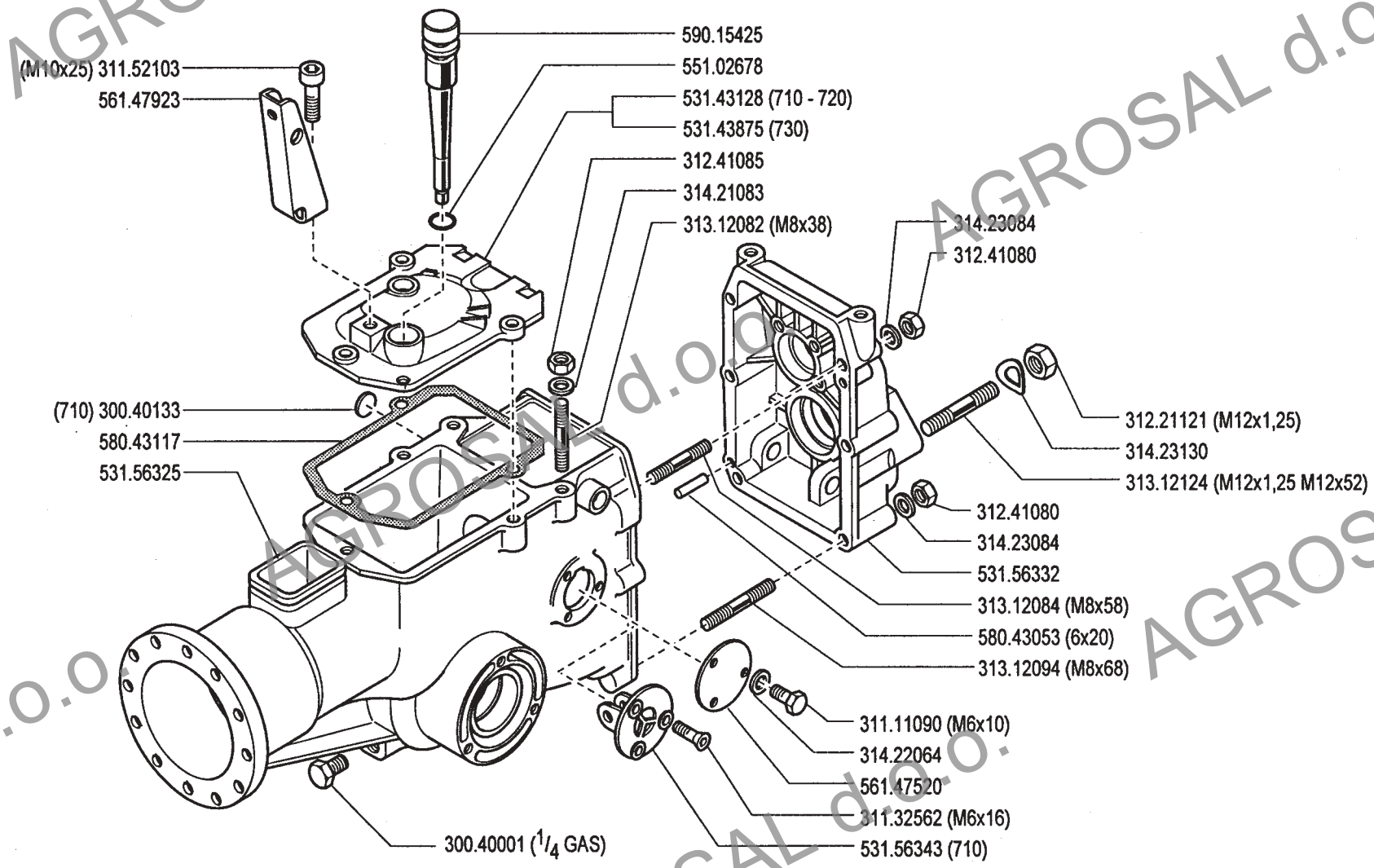

BCS 700 serie 94	SCATOLA CAMBIO CAJA DE CAMBIO / GEARBOX BOITE DE VITESSES / WECHSELGETRIEBE	DALLA MACCHINA DE LA MAQUINA DE LA MACHINE FROM THE MACHINE AB DER MASCHINE N.		03.00 02.05.1994

AGROSAL d.o.o.

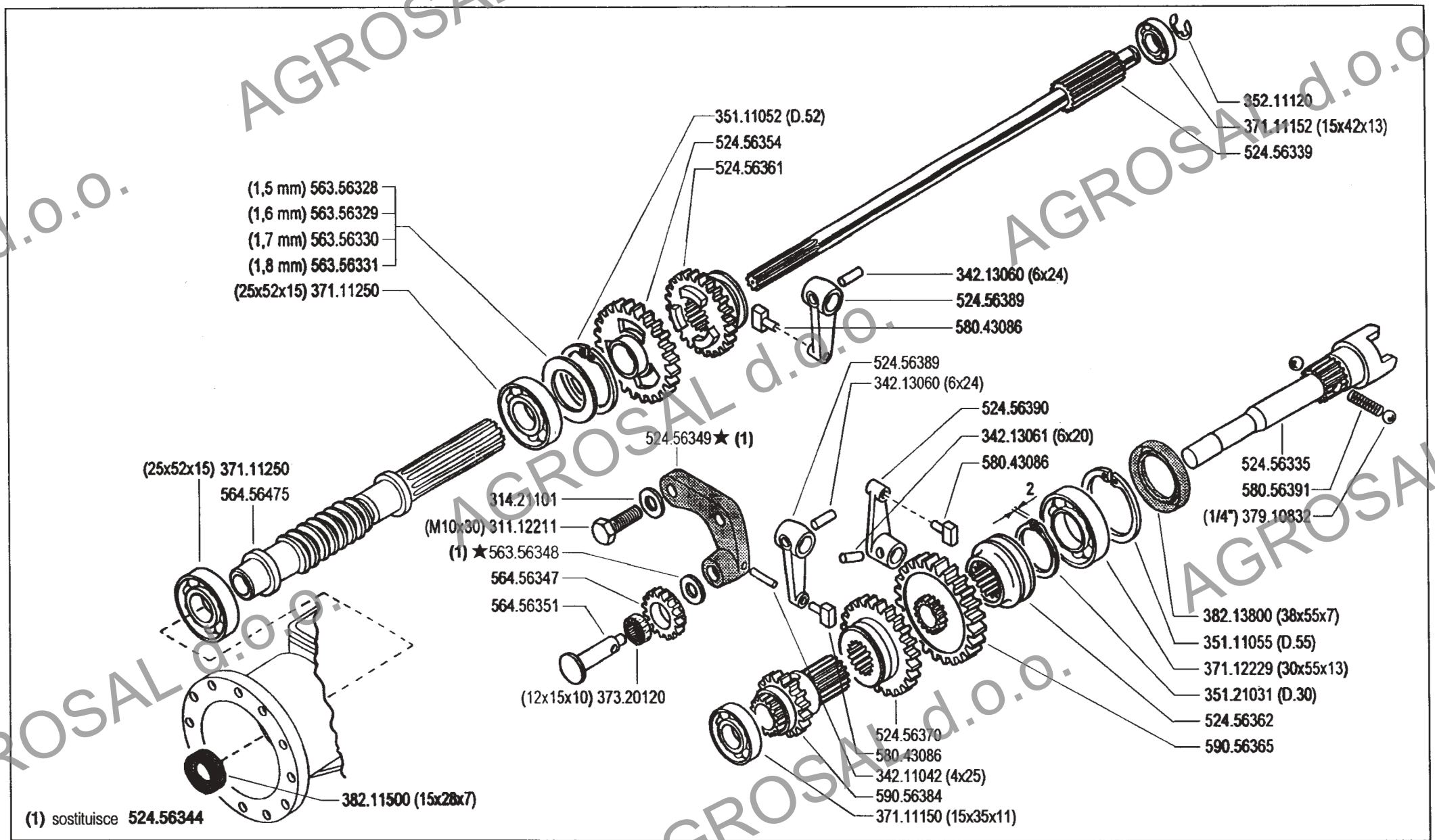

BCS	700 serie 94	INGRANAGGI CAMBIO (720-730) GEARS / ENGRANAGES ENGRANAJES / ZAHNRÄDER	DALLA MACCHINA DE LA MAQUINA DE LA MACHINE FROM THE MACHINE AB DER MASCHINE ★N.	AGGIORNAMENTO REVISION MISE A JOUR APLAZAMIENTO ANPASSUNG	05 9/2000	Rev. 2

AGROSAL d.o.o.

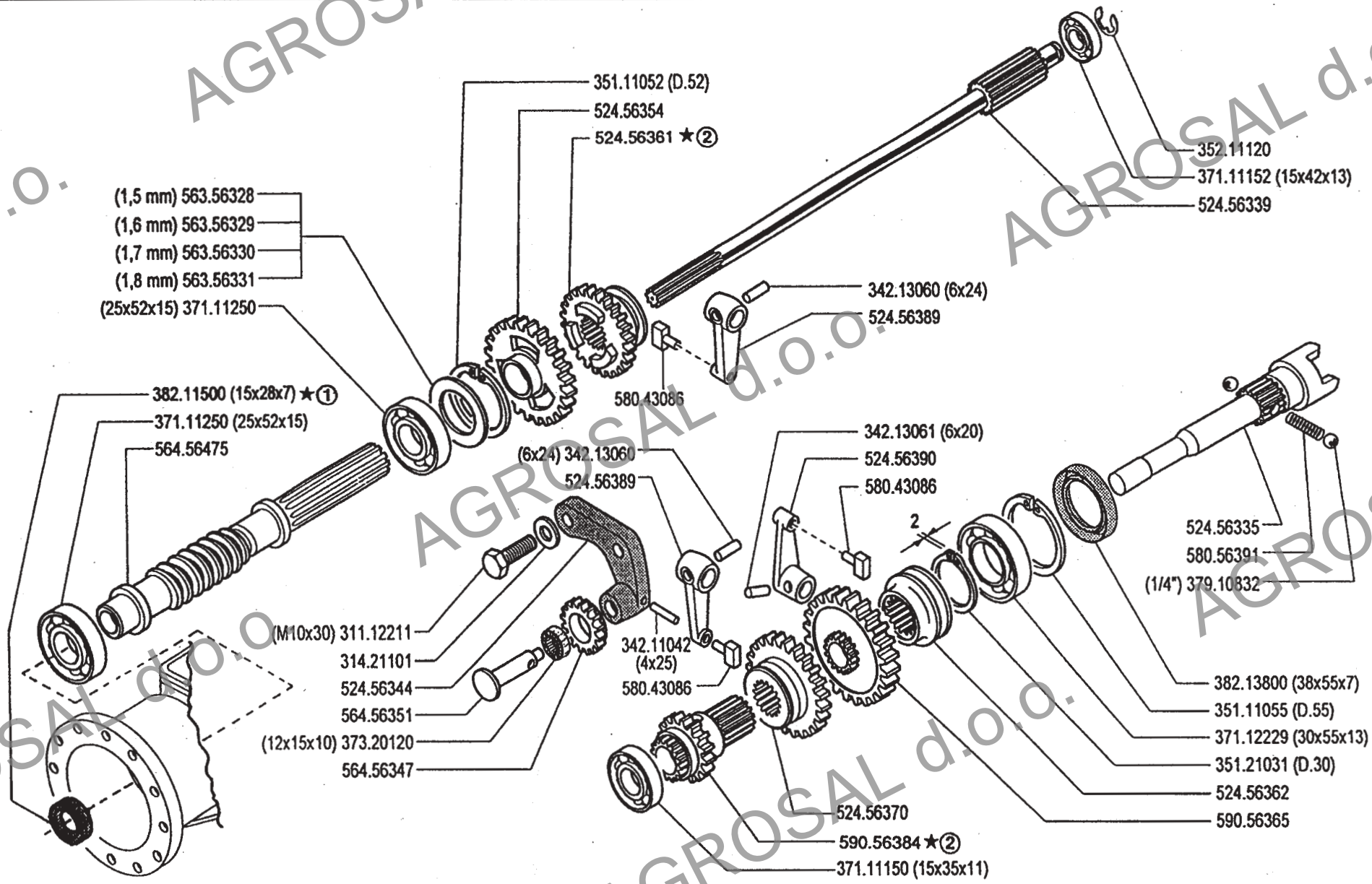

BCS

700 serie 94

INGRANAGGI CAMBIO (720-730)

GEARS
ENGRANAJES

ENGRANAGES
ZAHNRÄDER

DALLA MACCHINA
DE LA MAQUINA
DE LA MACHINE
FROM THE MACHINE
AB DER MASCHINE

②	202292 (730)	
②	109998 (720)	
①	201782 (730)	
①	108090 (720)	

★N.

05

Mod. 01

10/1996

2ENNE

AGROSAL d.o.o.

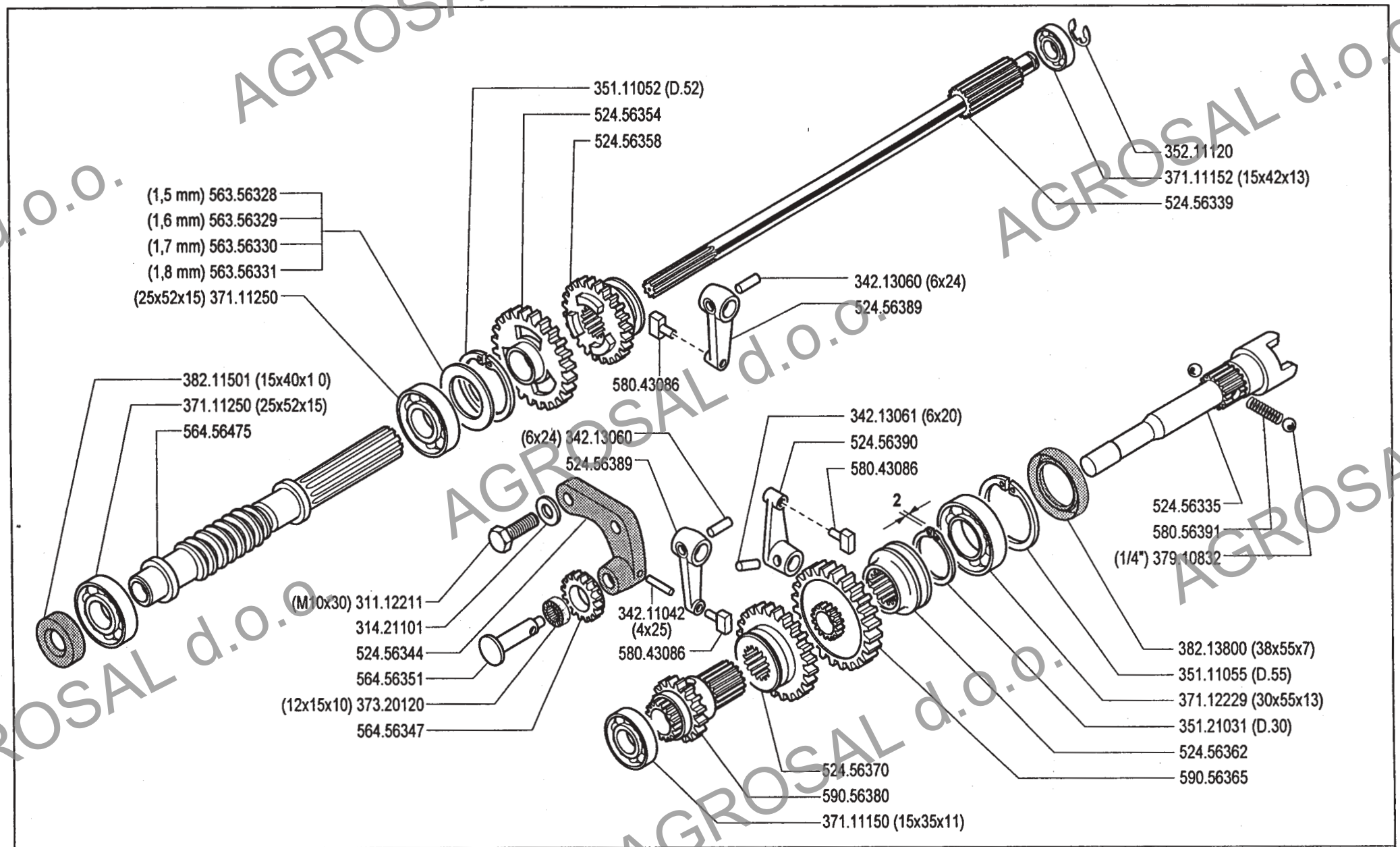

BCS	700 serie 94	**INGRANAGGI CAMBIO (720 - 730)** ENGRANAJES / GEARS ENGRANAGES / ZAHNRÄDER	DALLA MACCHINA DE LA MAQUINA DE LA MACHINE FROM THE MACHINE AB DER MASCHINE N.	05.00 02.05.1994

AGROSAL d.o.o.

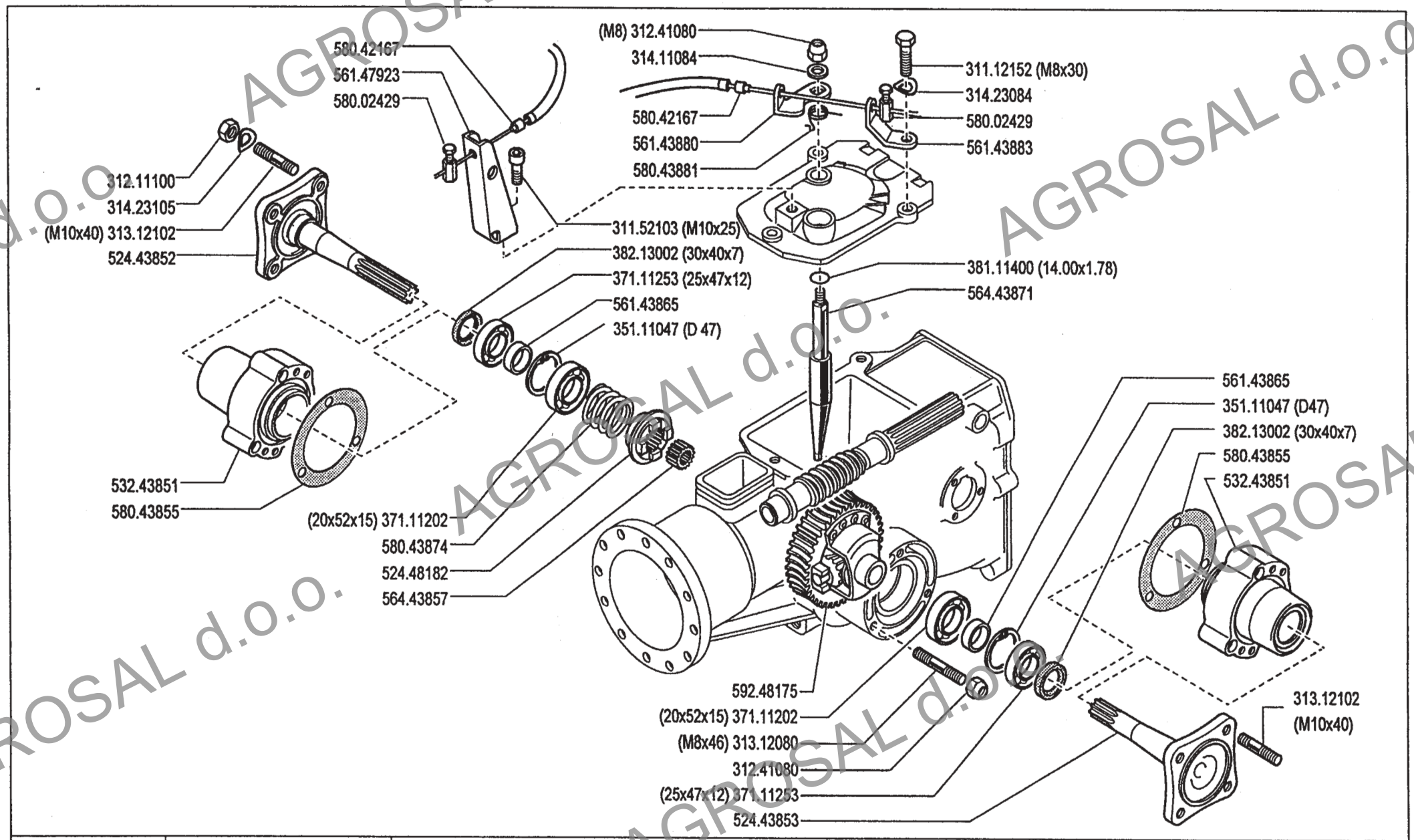

BCS	700 serie 94	**DIFFERENZIALE (730)** DIFFERENTIAL DIFFERENCIAL DIFFERENTIEL DIFFERENTIAL	DALLA MACCHINA DE LA MAQUINA DE LA MACHINE FROM THE MACHINE AB DER MASCHINE N.	07	Mod. 00 5/1994

AGROSAL d.o.o.

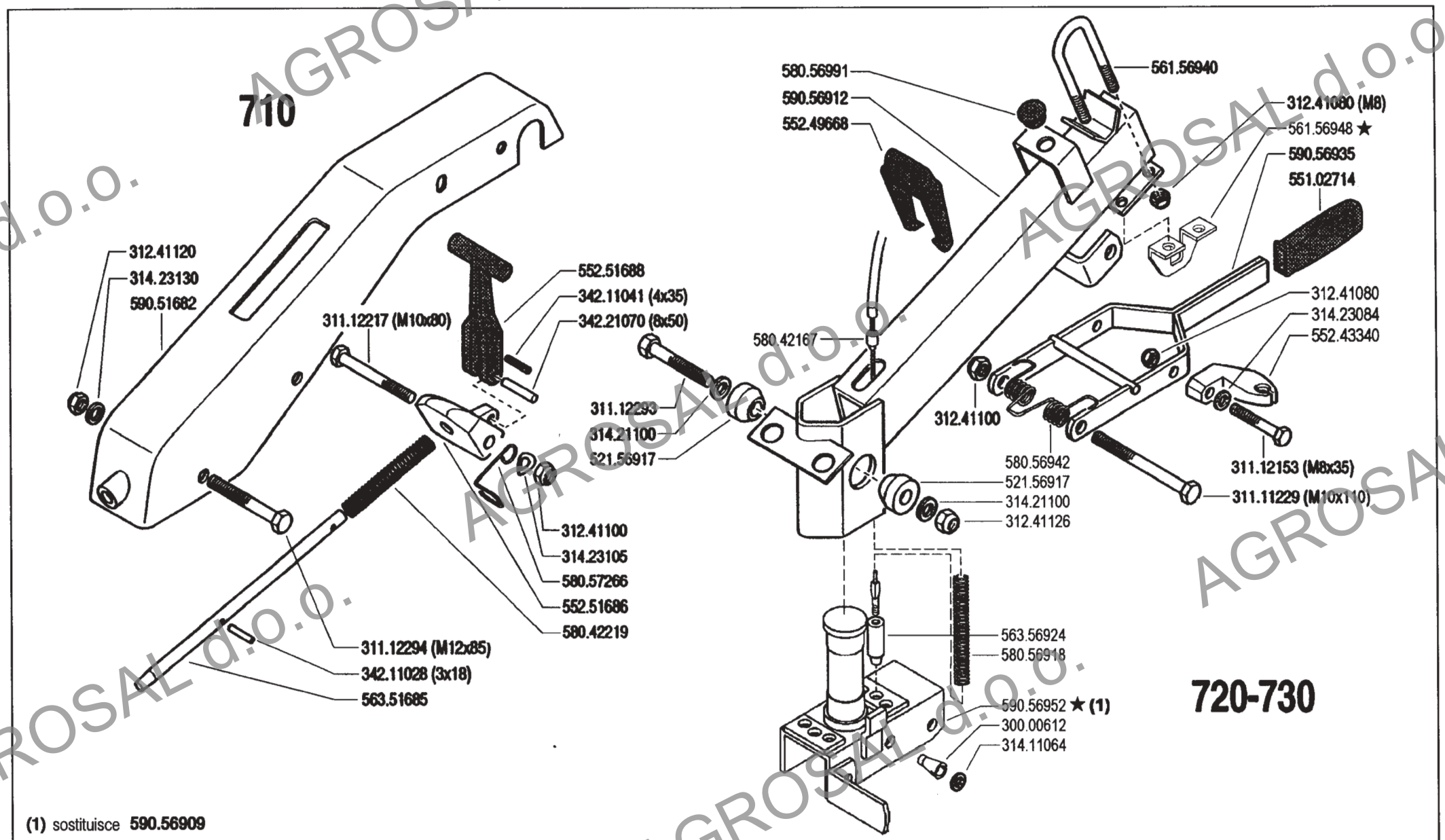

(1) sostituisce **590.56909**

BCS	700 serie 94	**PIANTONE (710-720-730)** STEERING COLUMN / PLANTON COLUMNA / LENKSÄULE	DALLA MACCHINA DE LA MAQUINA DE LA MACHINE FROM THE MACHINE AB DER MASCHINE ★N.	AGGIORNAMENTO REVISION MISE A JOUR APLAZAMIENTO ANPASSUNG	08 3/2003	Rev. 4

AGROSAL d.o.o.

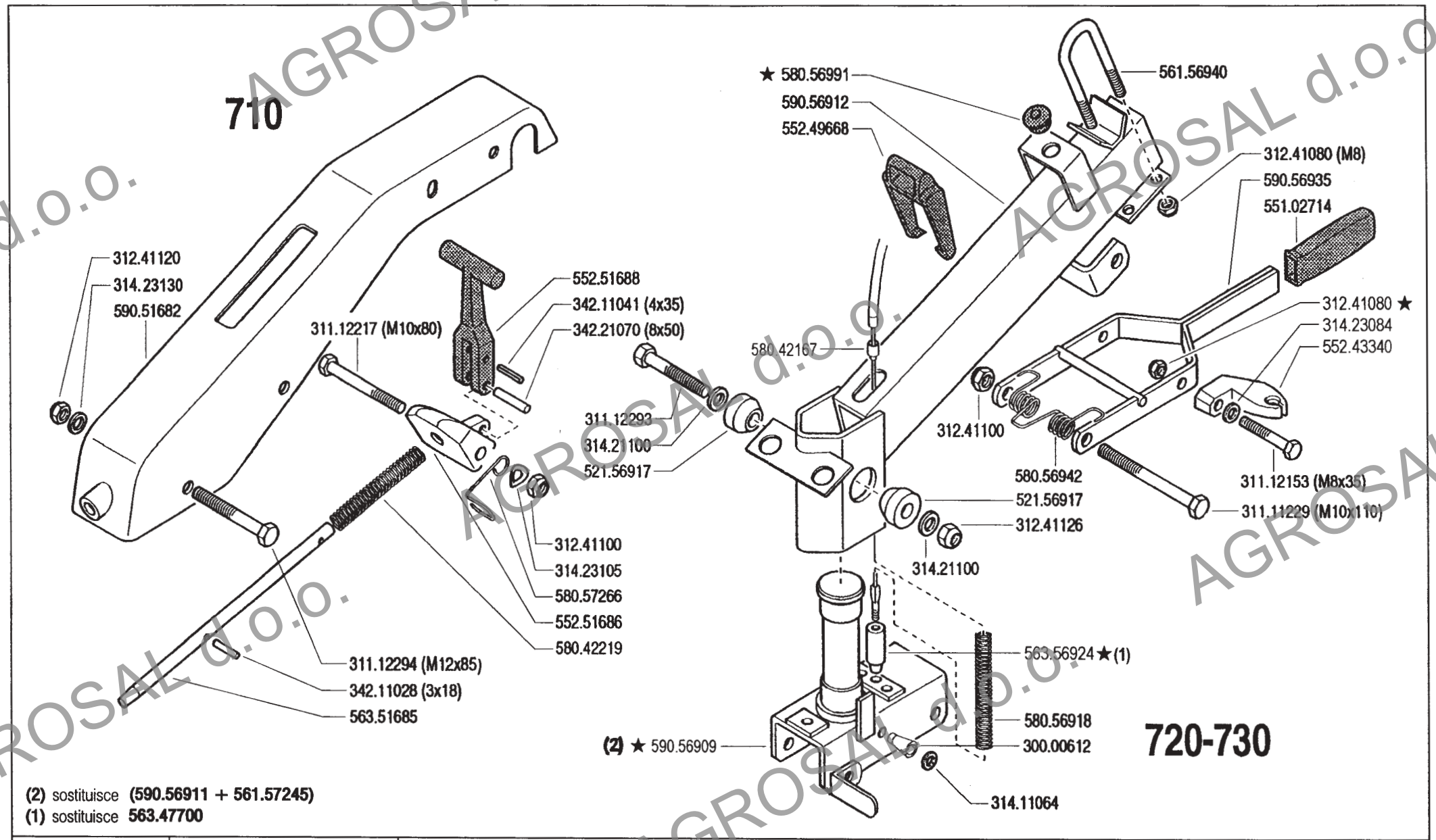

(2) sostituisce **(590.56911 + 561.57245)**
(1) sostituisce **563.47700**

BCS	700 serie 94	**PIANTONE (710-720-730)** STEERING COLUMN / PLANTON COLUMNA / LENKSÄULE	DALLA MACCHINA DE LA MAQUINA DE LA MACHINE FROM THE MACHINE AB DER MASCHINE ★N.	AGGIORNAMENTO REVISION MISE A JOUR APLAZAMIENTO ANPASSUNG	08 3/2001	Rev. 3

AGROSAL d.o.o.

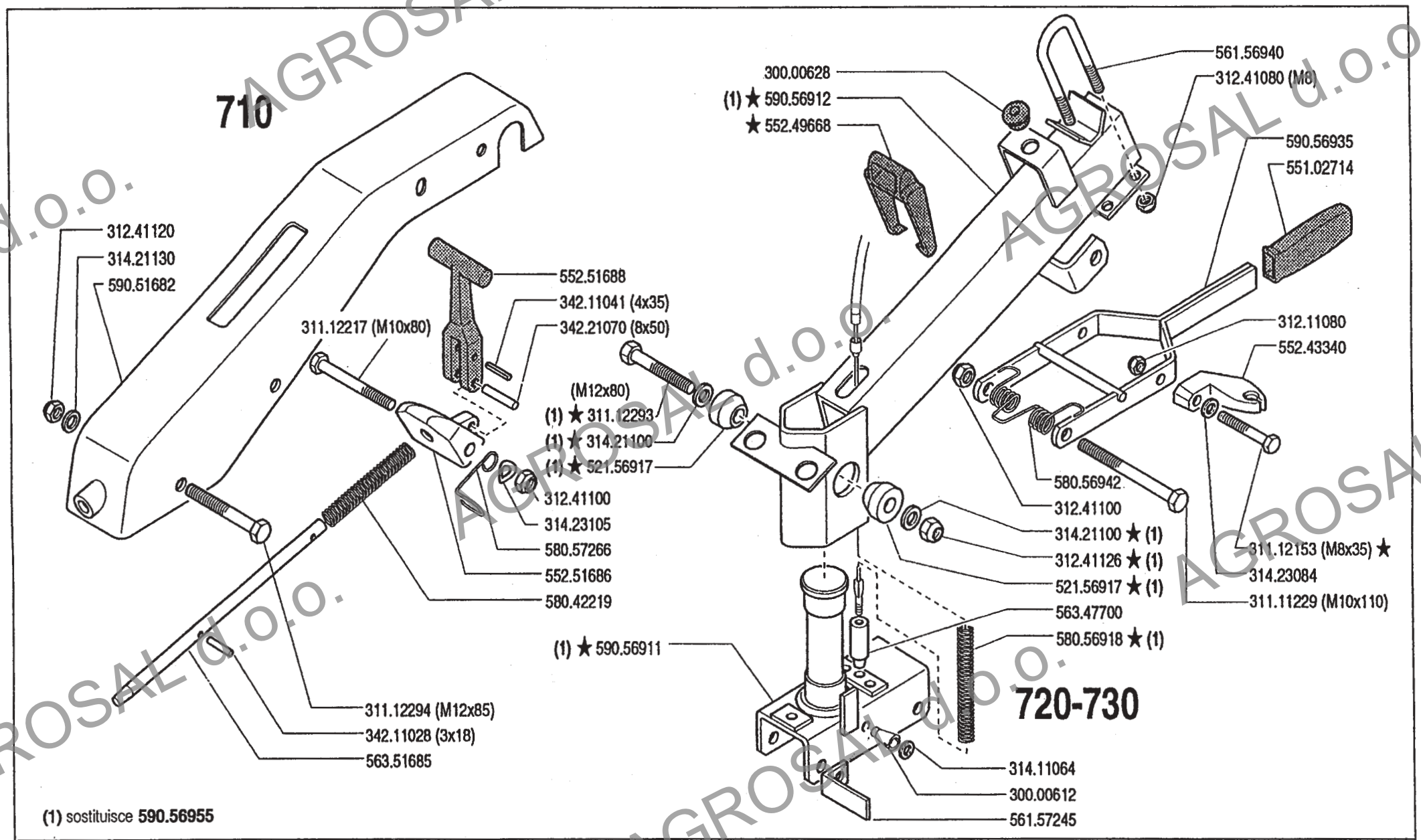

BCS	700 serie 94	PIANTONE (710-720-730) STEERING COLUMN / PLANTON COLUMNA / LENKSÄULE	DALLA MACCHINA DE LA MAQUINA DE LA MACHINE FROM THE MACHINE AB DER MASCHINE ★N.	203456 (730) 113894 (720)	08 / 3/1997 — Mod. 02

AGROSAL d.o.o.

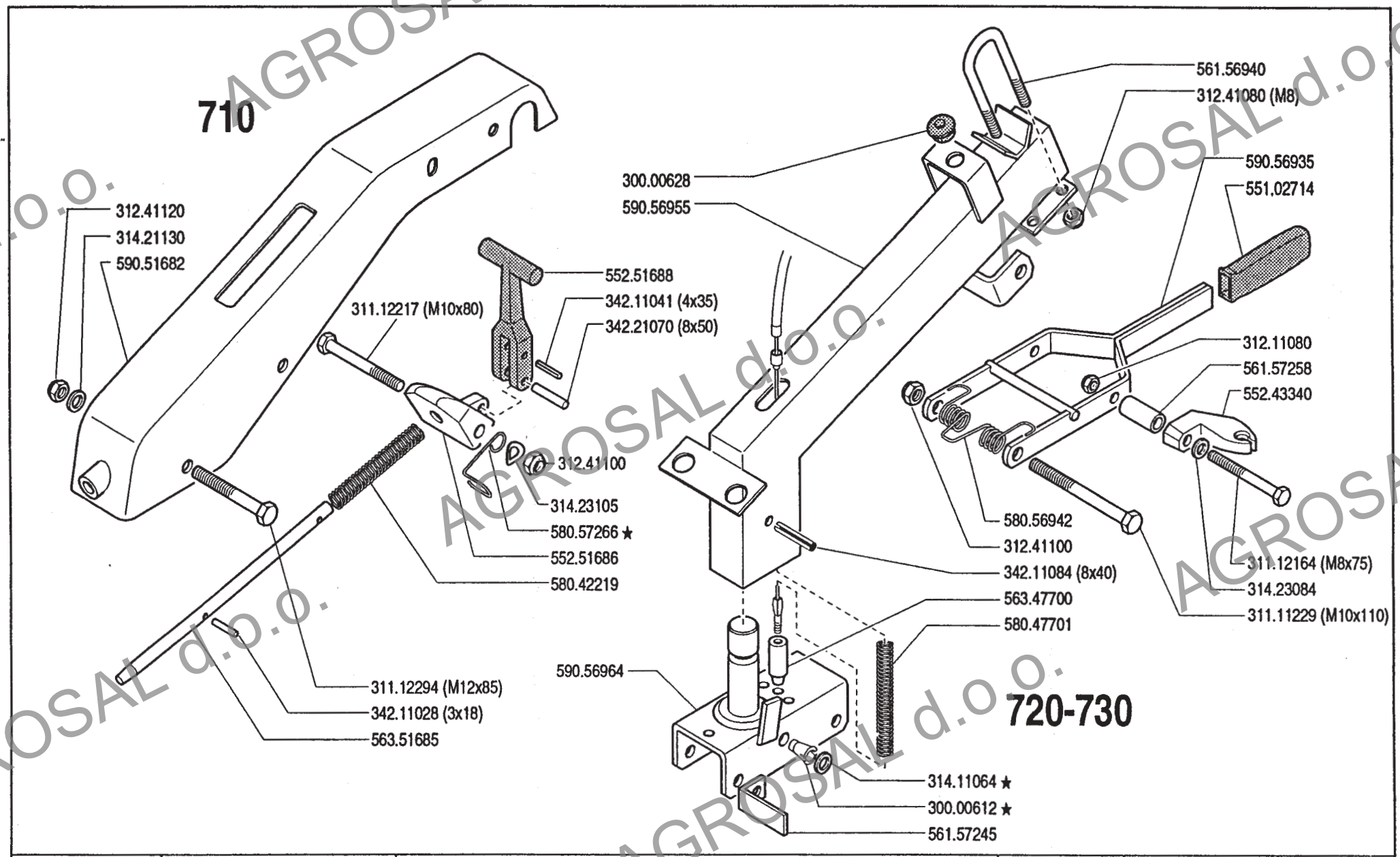

BCS 700 serie 94	PIANTONE (710 - 720 - 730) COLUMNA / STEERING COLUMN PLANTON / LENKSÄULE	DALLA MACCHINA DE LA MAQUINA DE LA MACHINE FROM THE MACHINE AB DER MASCHINE ★ N.	AGGIORNAMENTO REVISION MISE A JOUR APLAZAMIENTO ANPASSUNG	08.01 01.06.1995	

AGROSAL d.o.o.

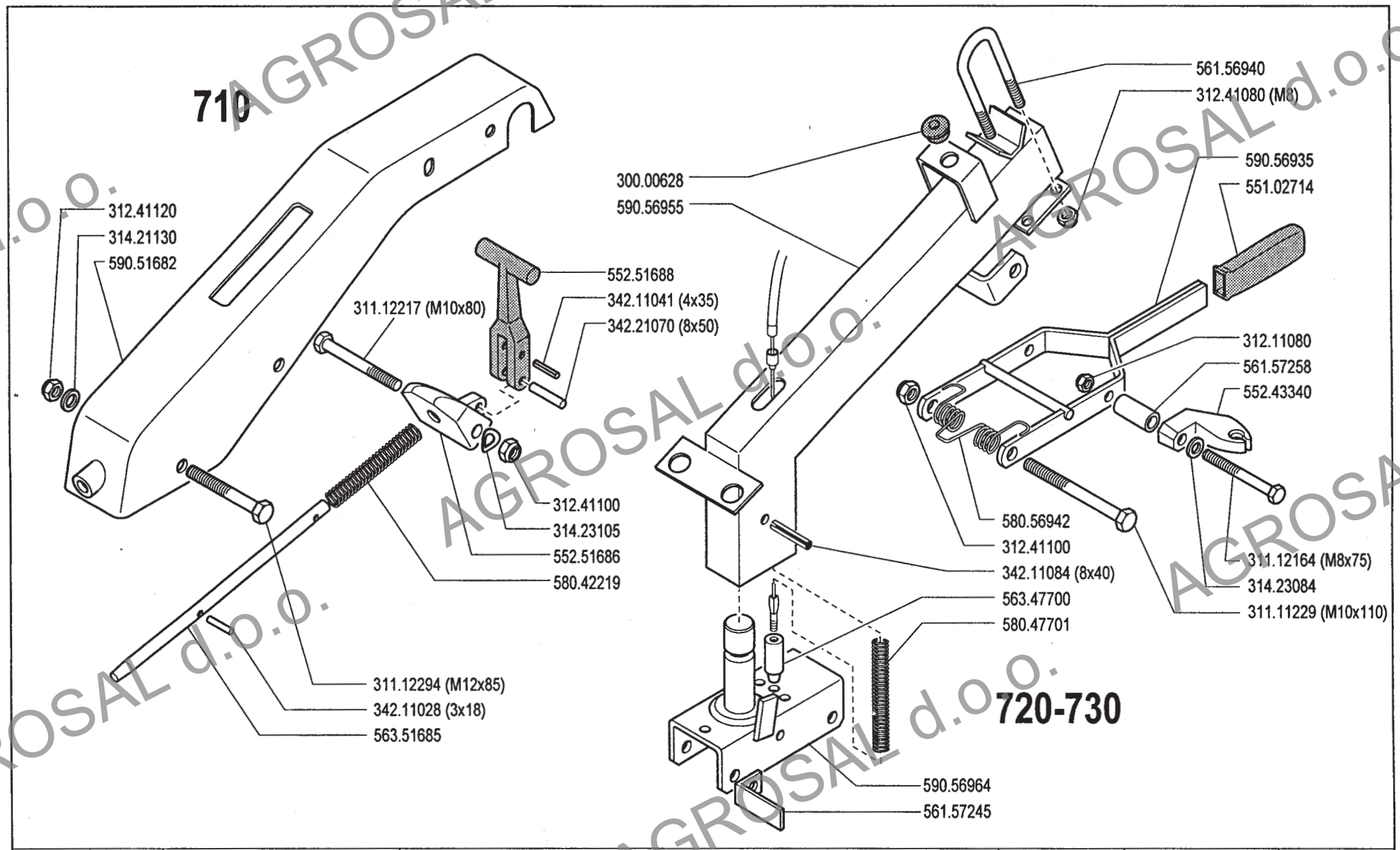

BCS	700 serie 94	PIANTONE COLUMNA — STEERING COLUMN PLANTON — LENKSÄULE	DALLA MACCHINA DE LA MAQUINA DE LA MACHINE FROM THE MACHINE AB DER MASCHINE N.		08.00 02.05.1994

AGROSAL d.o.o.

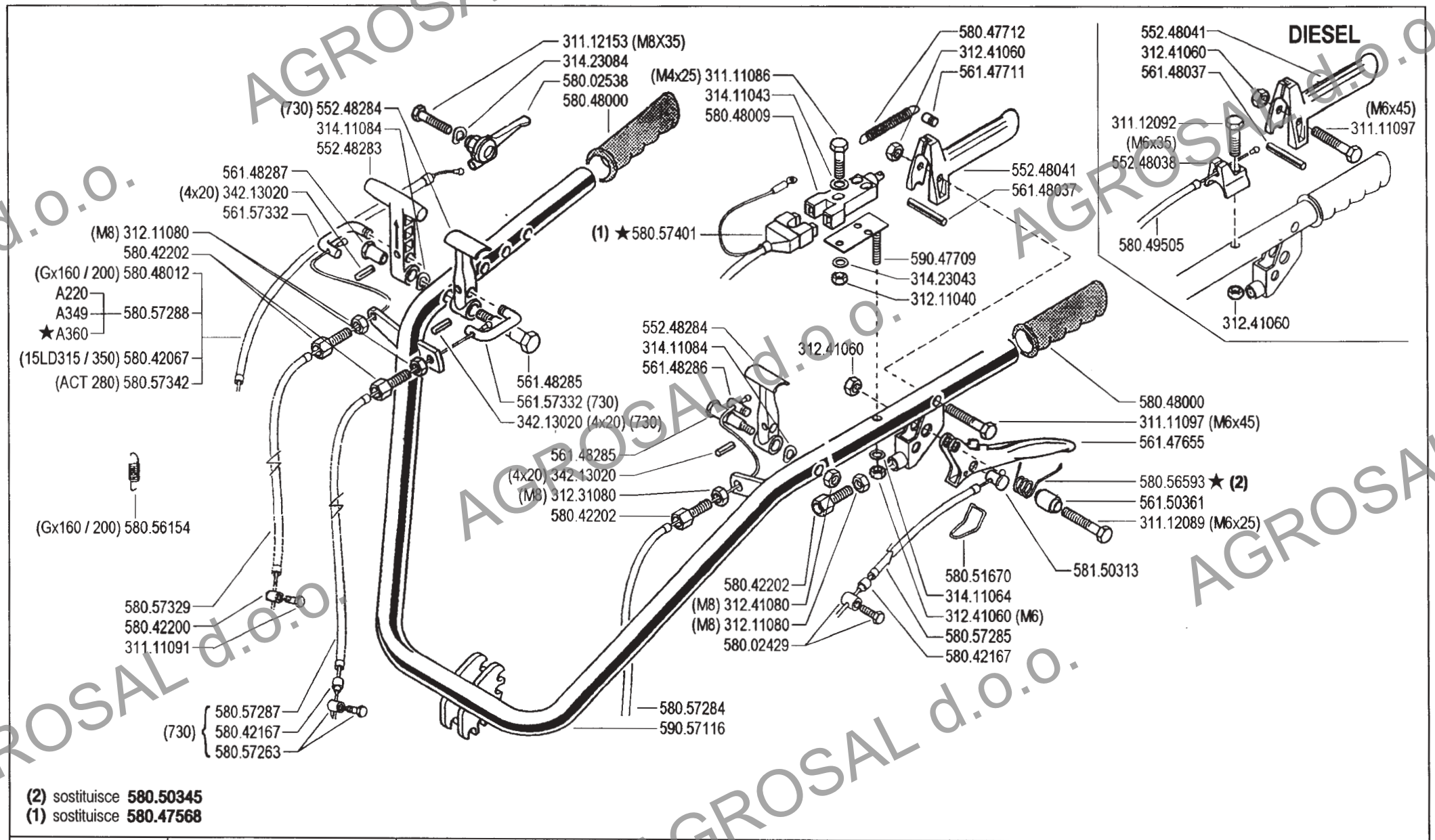

(2) sostituisce **580.50345**
(1) sostituisce **580.47568**

BCS	700 serie 94	**MANUBRIO (720-730)** HANDLEBAR MANILLAR MANCHERON LENKER	DALLA MACCHINA DE LA MAQUINA DE LA MACHINE FROM THE MACHINE AB DER MASCHINE ★N.	AGGIORNAMENTO REVISION MISE A JOUR APLAZAMIENTO ANPASSUNG	10	Rev. 4
					11/2002	2ENNE

AGROSAL d.o.o.

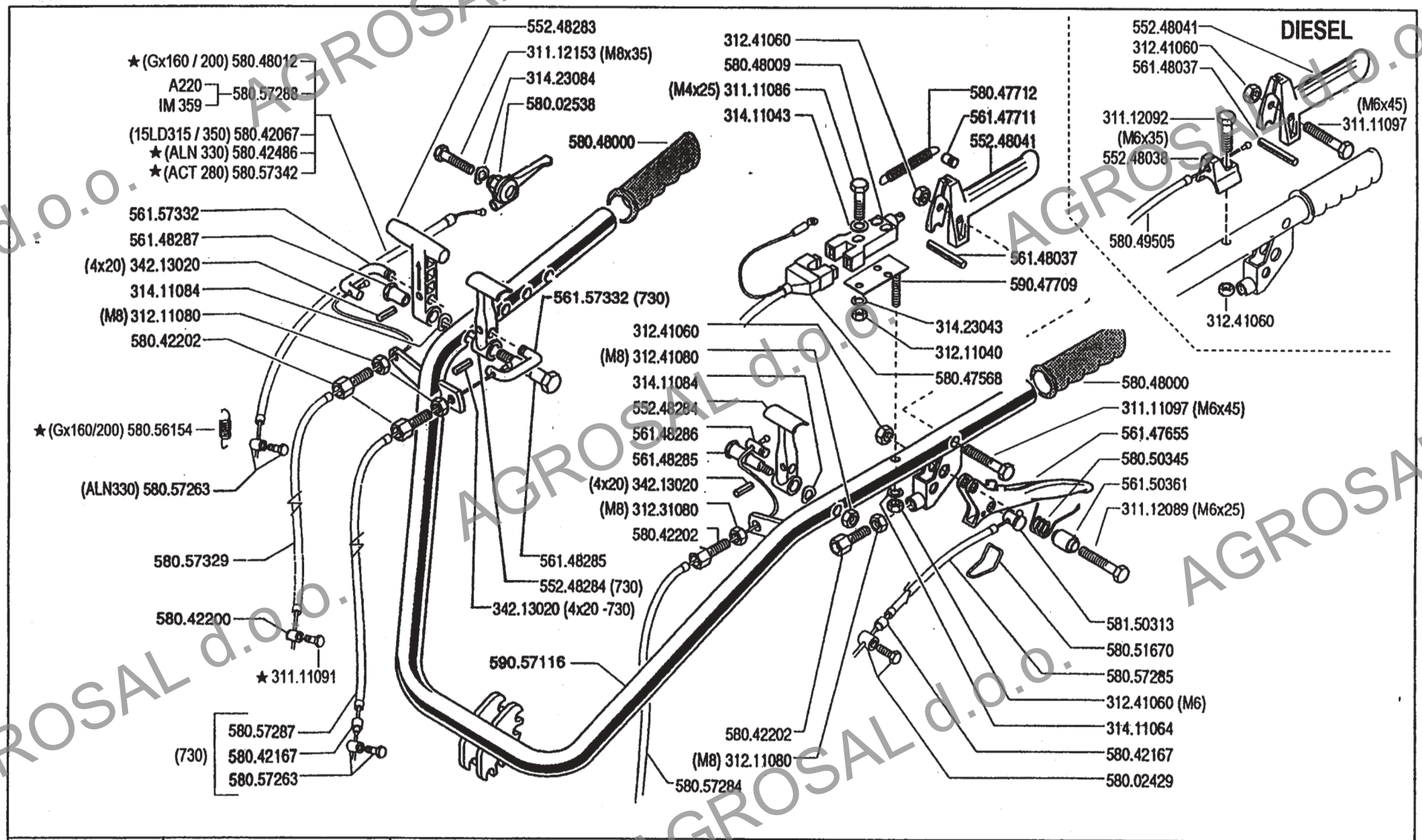

BCS	700 serie 94	MANUBRIO (720-730) HANDLEBAR / MANILLAR / MANCHERON / LENKER	DALLA MACCHINA DE LA MAQUINA DE LA MACHINE FROM THE MACHINE AB DER MASCHINE ★N.	AGGIORNAMENTO REVISION MISE A JOUR APLAZAMIENTO ANPASSUNG	10 / 11/1999 — Mod. 03

AGROSAL d.o.o.

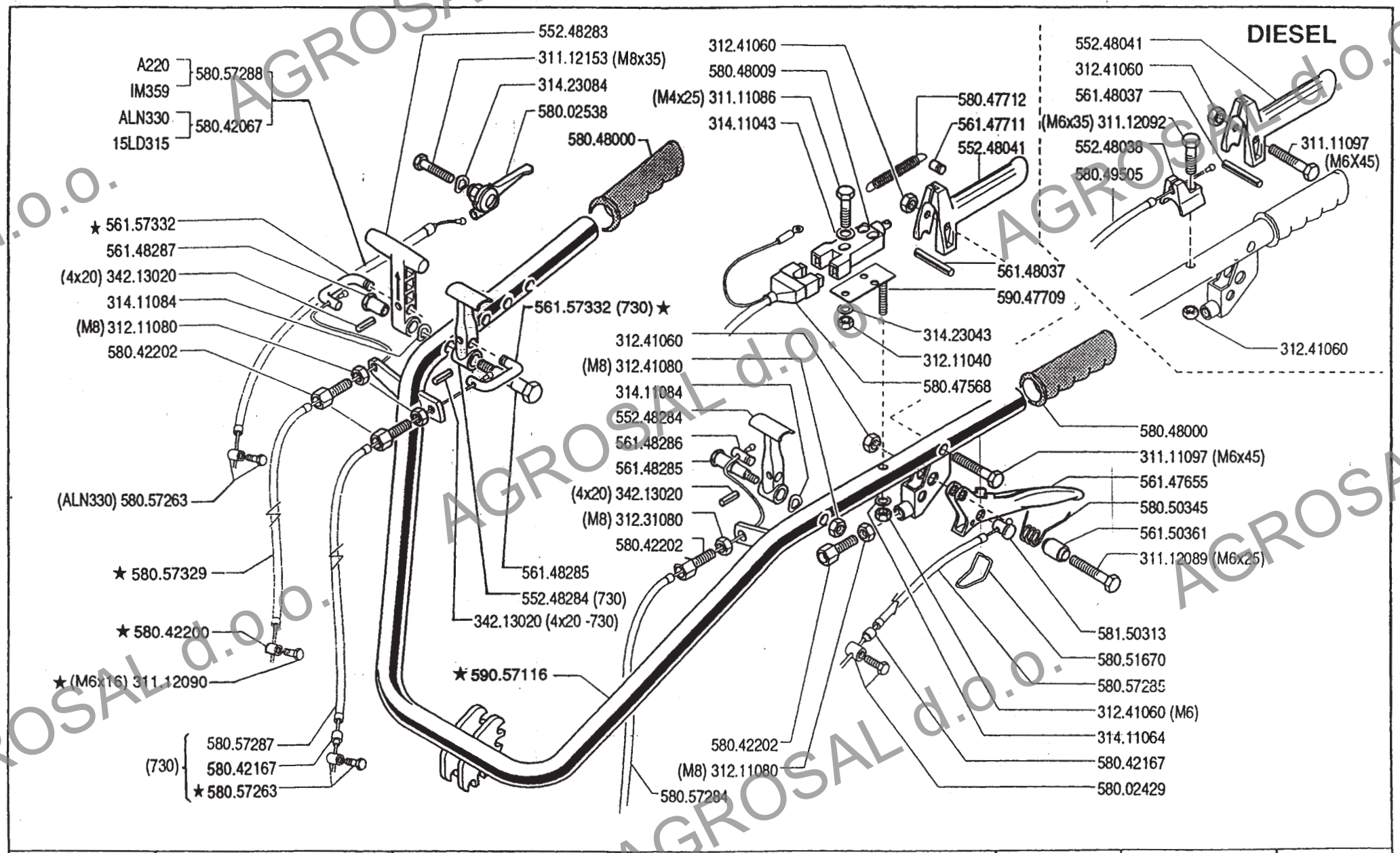

BCS 700 serie 94	MANUBRIO (720 - 730)	DALLA MACCHINA / DE LA MAQUINA / DE LA MACHINE / FROM THE MACHINE / AB DER MASCHINE		10.02
	MANILLAR / HANDLEBAR		202038 (730)	02.09.1996
	MANCHERON / LENKER	★N.	109159 (720)	

AGROSAL d.o.o.

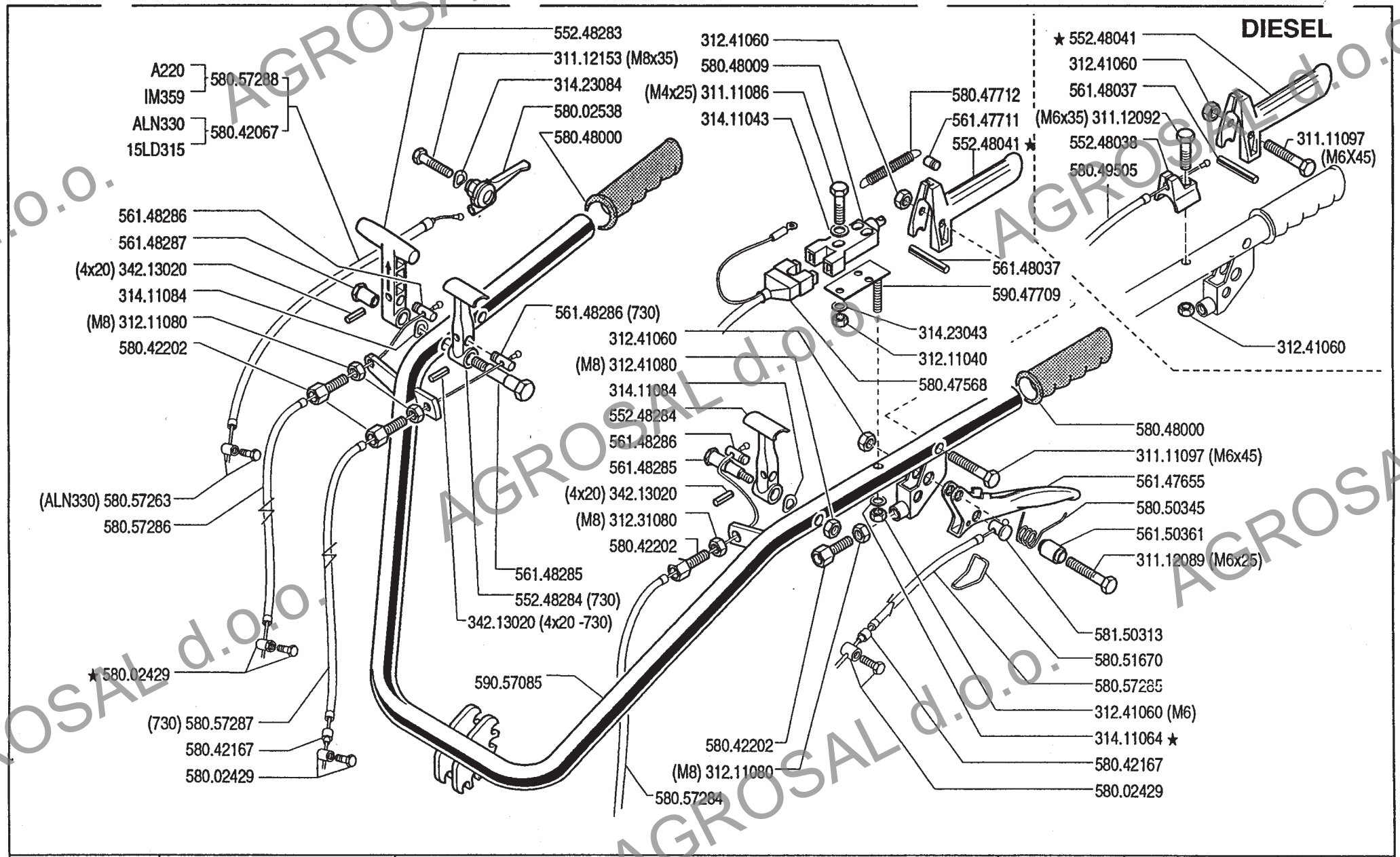

BCS	700 serie 94	MANUBRIO (720 - 730) MANILLAR / HANDLEBAR MANCHERON / LENKER	DALLA MACCHINA DE LA MAQUINA DE LA MACHINE FROM THE MACHINE AB DER MASCHINE ★ N.	AGGIORNAMENTO REVISION MISE A JOUR APLAZAMIENTO ANPASSUNG	10.01 01.01.1996

AGROSAL d.o.o.

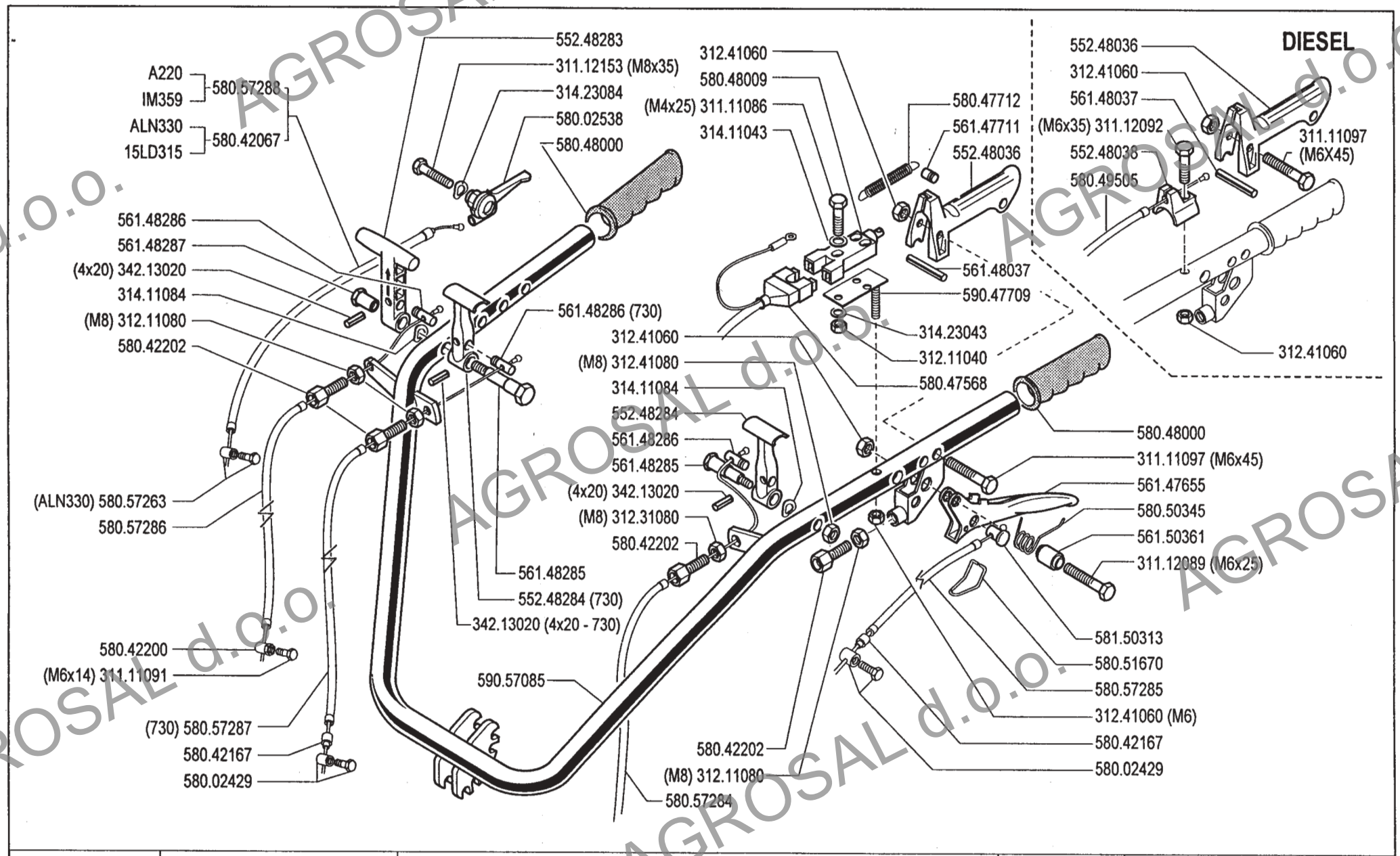

BCS 700 serie 94	MANUBRIO (720 - 730) MANILLAR / HANDLEBAR MANCHERON / LENKER	DALLA MACCHINA DE LA MAQUINA DE LA MACHINE FROM THE MACHINE AB DER MASCHINE N.		10.00 02.05.1994

AGROSAL d.o.o.

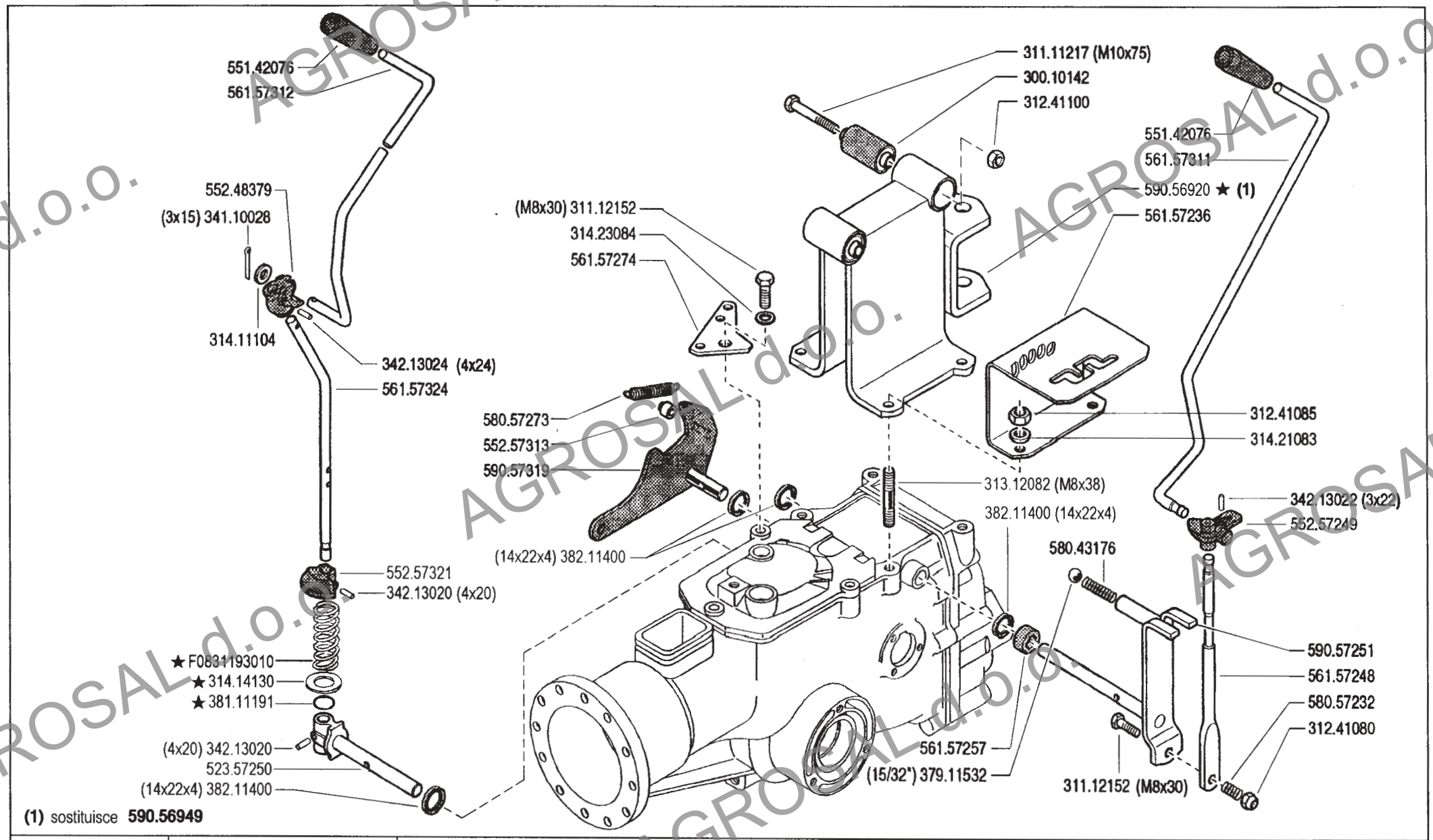

(1) sostituisce **590.56949**

BCS	700 serie 94	COMANDI (720-730) CONTROLS MANDOS COMMANDES ANTRIEBE	DALLA MACCHINA DE LA MAQUINA DE LA MACHINE FROM THE MACHINE AB DER MASCHINE ★N.	AGGIORNAMENTO REVISION MISE A JOUR APLAZAMIENTO ANPASSUNG	12 1/2003	Rev. 3

AGROSAL d.o.o.

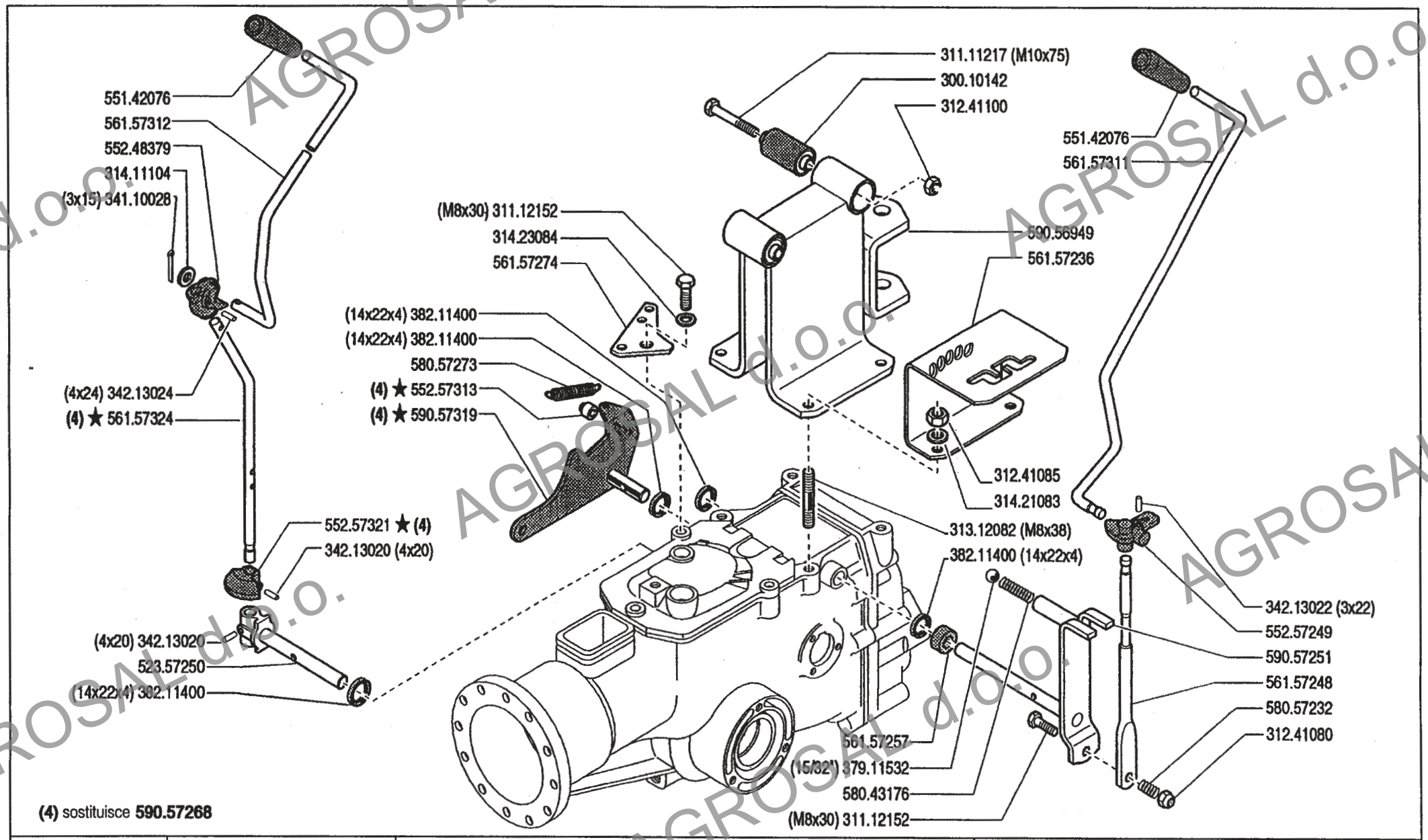

(4) sostituisce **590.57268**

BCS	700 serie 94	**COMANDI (720-730)** CONTROLS / COMMANDES MANDOS / ANTRIEBE	DALLA MACCHINA DE LA MAQUINA DE LA MACHINE FROM THE MACHINE AB DER MASCHINE ★N.	202775 (730) 111204 (720)	12 9/1996	Mod. 02

AGROSAL d.o.o.

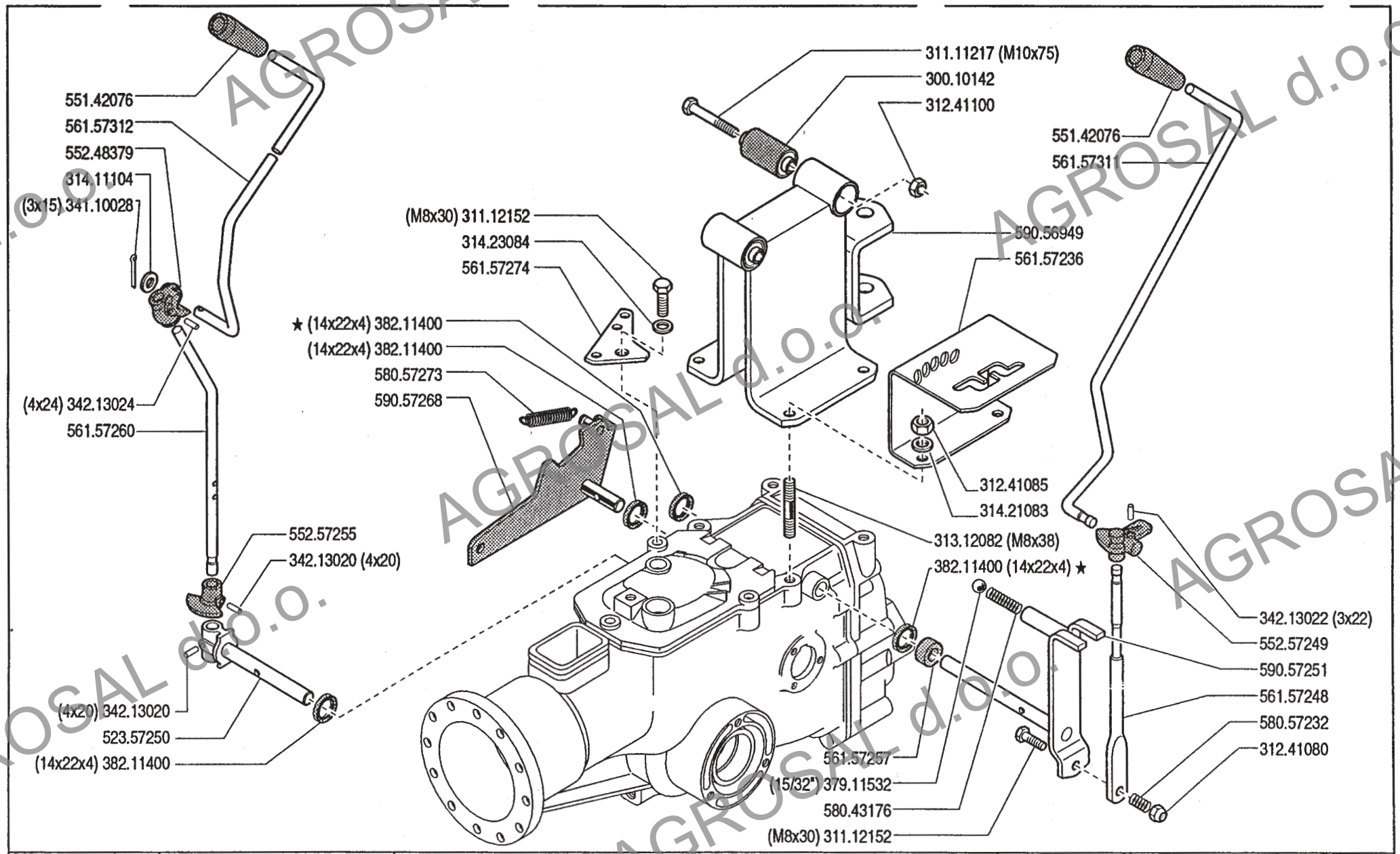

BCS 700 serie 94	COMANDI (720 - 730) MANDOS / CONTROLS COMMANDES / ANTRIEBE	DALLA MACCHINA DE LA MAQUINA DE LA MACHINE FROM THE MACHINE AB DER MASCHINE ★ N.	201782 (730) 108090 (720)	12.01 01.06.1995	

AGROSAL d.o.o.

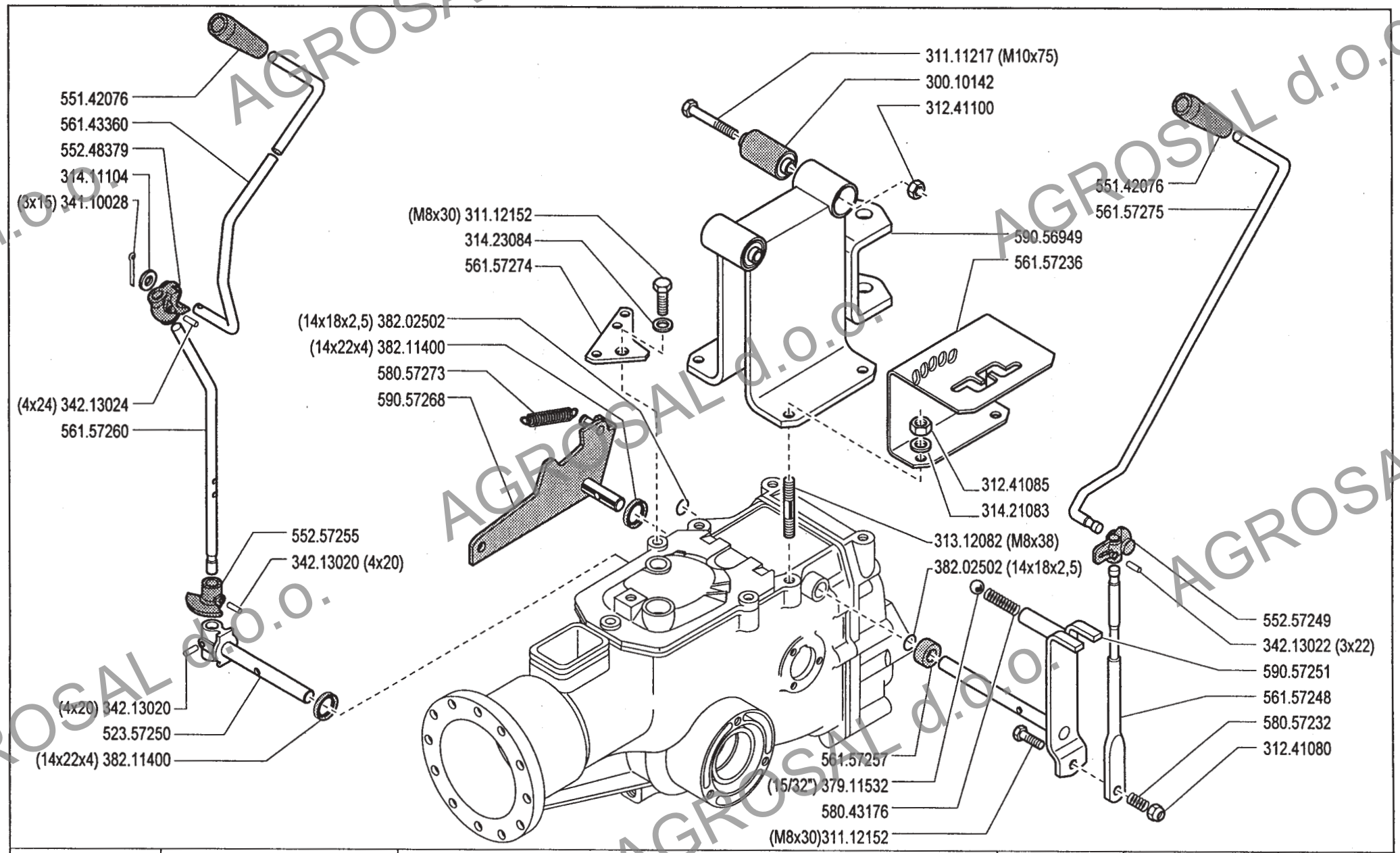

BCS 700 serie 94	COMANDI (720 - 730) MANDOS / CONTROLS COMMANDES / ANTRIEBE	DALLA MACCHINA DE LA MAQUINA DE LA MACHINE FROM THE MACHINE AB DER MASCHINE N.		12.00 02.05.1994

AGROSAL d.o.o.

	A	B	C	D
3.50 - 8"	391.13502	394.13502	580.43250	922.43686 (Kg.10)
4.00 - 8"	391.14008	394.14008	580.43250	922.43686 (Kg.10)
4.0 - 10"	391.14010	394.14010	580.48330	922.48715 (Kg.15)
5.0 - 10"	391.15010	394.15010	580.48330	922.48715 (Kg.15)
5.00 - 12"	391.15012	394.15012	580.44804	922.48720 (Kg.34)
6.5/80 - 12"	391.16018	394.16018	580.44804	922.48720 (Kg.34)
6.5/80 - 15"	391.16020	394.16020	580.42746	922.48720 (Kg.34) ★

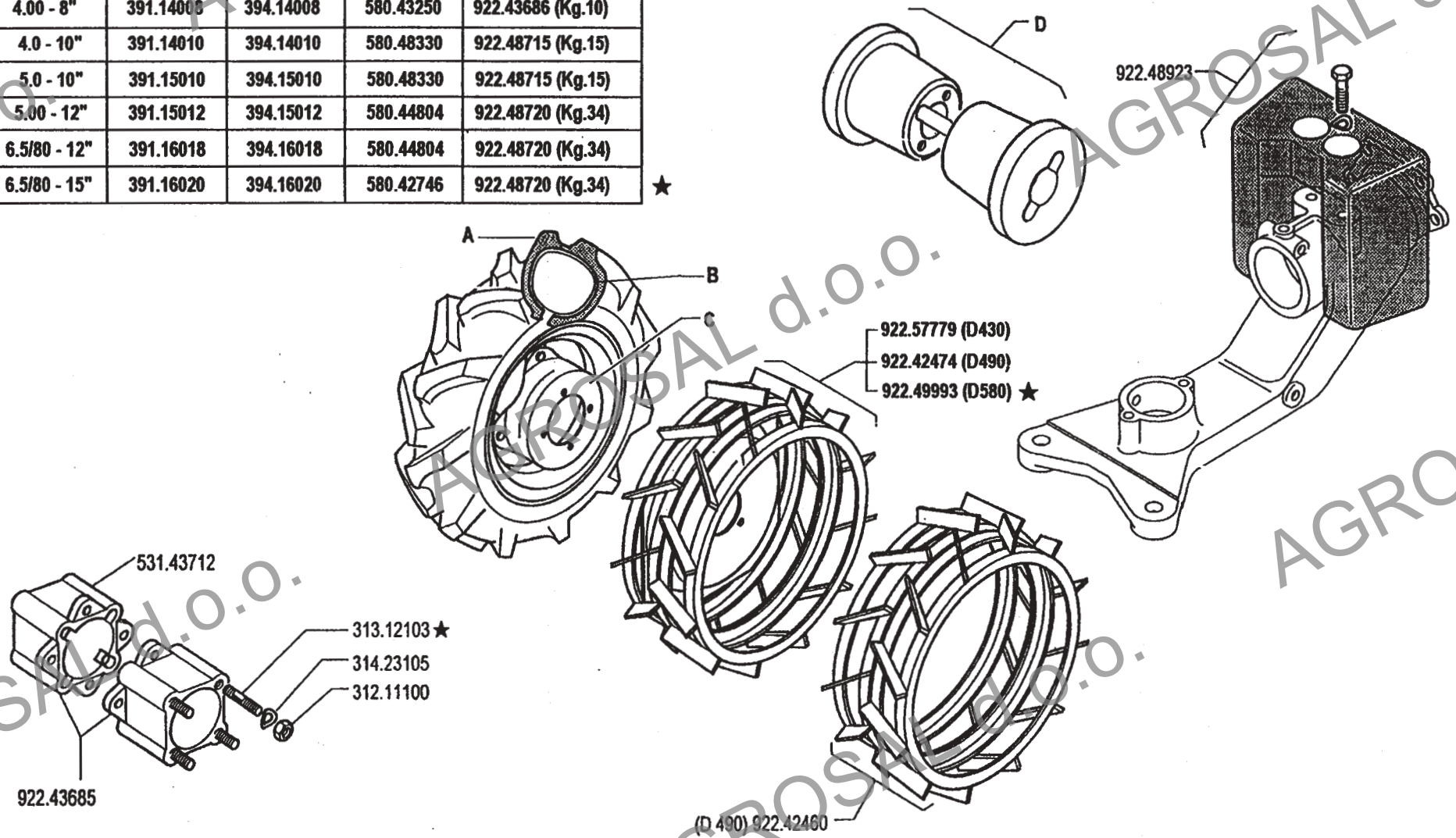

BCS	700 serie 94	RUOTE WHEELS RUEDAS ROUES RÄDER	DALLA MACCHINA DE LA MAQUINA DE LA MACHINE FROM THE MACHINE AB DER MASCHINE ★N.	AGGIORNAMENTO REVISION MISE A JOUR APLAZAMIENTO ANPASSUNG	13	Mod. 02 11/1999

AGROSAL d.o.o.

	A	B	C	D
3. 50 - 8"	391.13502	394.13502	580.43250	922.43686 (Kg 10)
4.00 - 8"	391.14008	394.14008	580.43250	922.43686 (Kg 10)
4.0 - 10"	391.14010	394.14010	580.48330	922.48715 (Kg 15)
5.0-10"	391.15010	394.15010	580.48330	922.48715 (Kg.15) ★
5.00 - 12"	391.15012	394.15012	580.44804	922.48720 (Kg 34)
6.5/80-12"	391.16018	394.16018	580.44804	922.48720 (Kg.34) ★

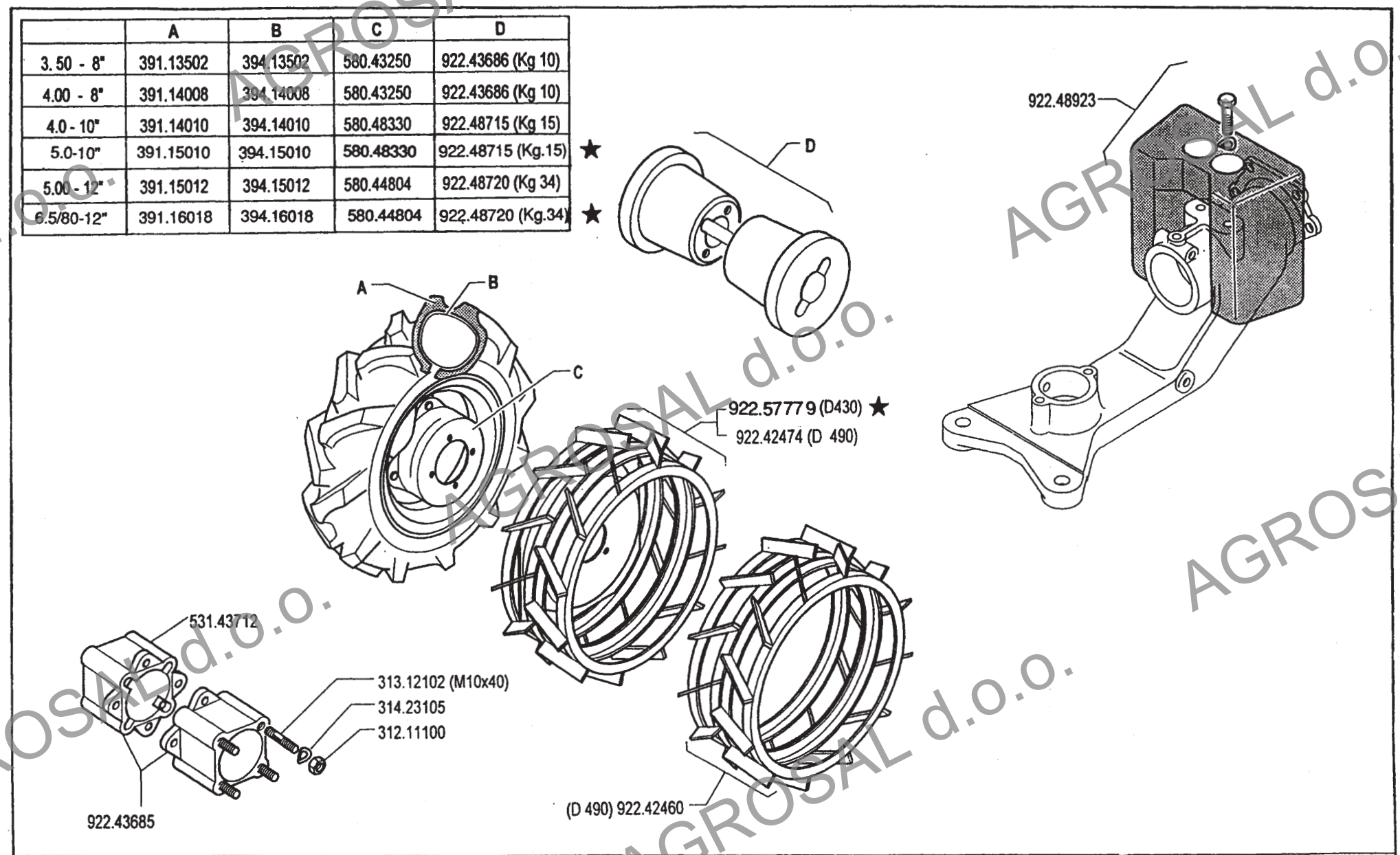

BCS 700 serie 94	RUOTE RUEDAS / WHEELS ROUES / RÄDER	DALLA MACCHINA DE LA MAQUINA DE LA MACHINE FROM THE MACHINE AB DER MASCHINE ★ N.	AGGIORNAMENTO REVISION MISE A JOUR APLAZAMIENTO ANPASSUNG	13.01 01.06.1995

AGROSAL d.o.o.

	A	B	C	D
3. 50 - 8"	391.13502	394.13502	580.43250	922.43686 (Kg 10)
4.00 - 8"	391.14008	394.14008	580.43250	922.43686 (Kg 10)
4.0 - 10"	391.14010	394.14010	580.48330	922.48715 (Kg 15)
5.00 - 12"	391.15012	394.15012	580.44804	922.48720 (Kg 34)

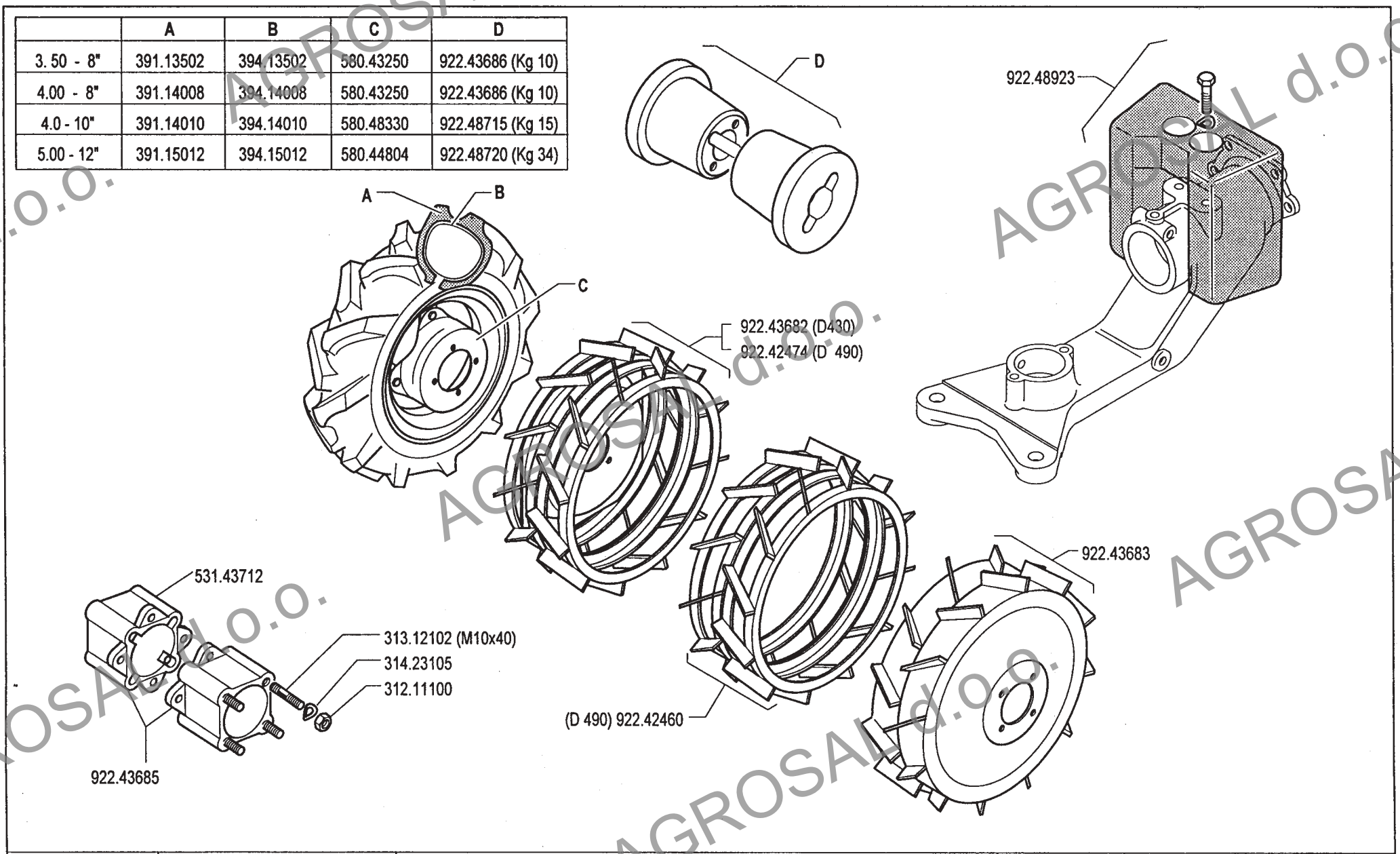

BCS	700 serie 94	RUOTE RUEDAS / WHEELS ROUES / RÄDER	DALLA MACCHINA DE LA MAQUINA DE LA MACHINE FROM THE MACHINE AB DER MASCHINE N.		13.00 02.05.1994

AGROSAL d.o.o.

580.46913

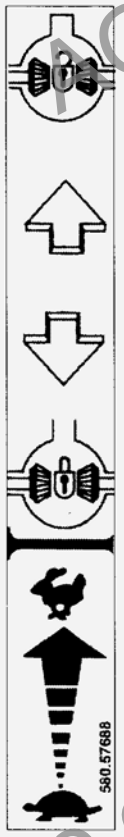

580.57688

580.57767 ★

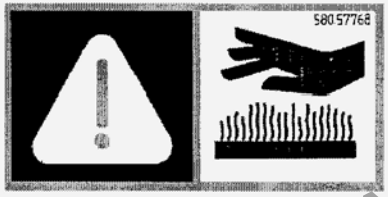

580.57768 ★

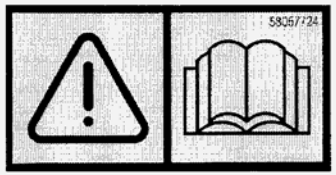

580.57724

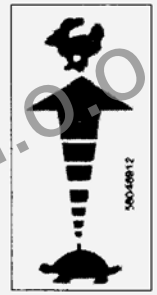

580.46912

580.57677

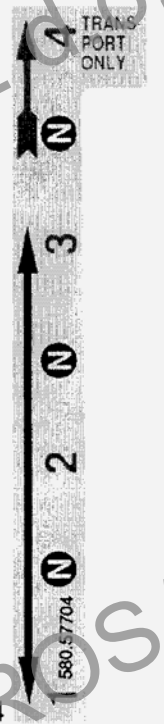

580.57704

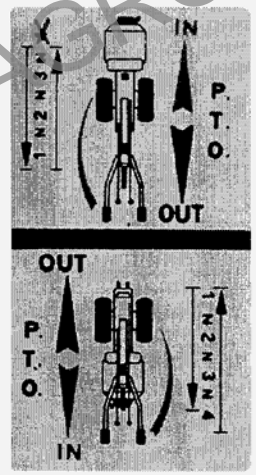

580.47729

580.57772 ★

580.57678

580.57676

580.57770 ★

BCS	700 serie 94	ADESIVI STICKERS ADHESIVOS AUTOCOLLANTS AUFKLEBES	DALLA MACCHINA DE LA MAQUINA DE LA MACHINE FROM THE MACHINE AB DER MASCHINE ★N.	AGGIORNAMENTO REVISION MISE A JOUR APLAZAMIENTO ANPASSUNG	14	Rev. 2
					12/2003	2ENNE

AGROSAL d.o.o.

580.57677

580.57704

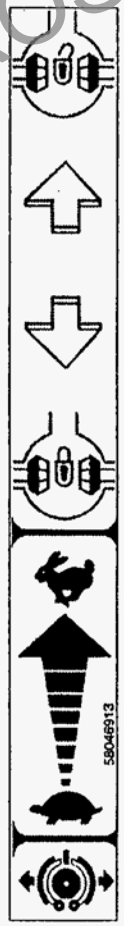

580.46913

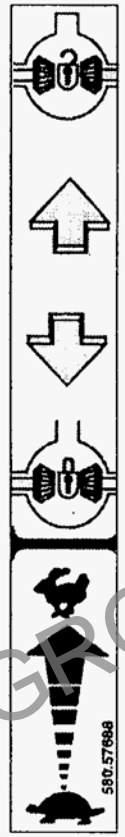

580.57688

580.46909

580.46910

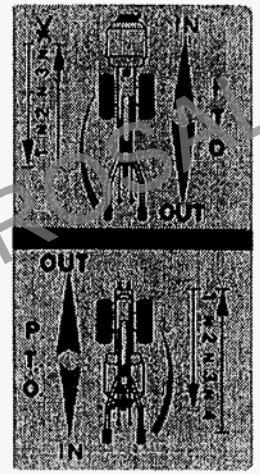

580.47729

580.46903

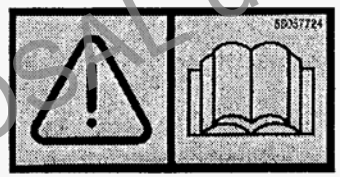

580.57724

580.46901

580.46902

580.57678

580.57676

580.46912

BCS	700 serie 94	ADESIVI STICKERS ADHESIVOS AUTOCOLLANTS AUFKLEBES	DALLA MACCHINA DE LA MAQUINA DE LA MACHINE FROM THE MACHINE AB DER MASCHINE ★N.	AGGIORNAMENTO REVISION MISE A JOUR APLAZAMIENTO ANPASSUNG	14	Mod. 01 9/1999

AGROSAL d.o.o.

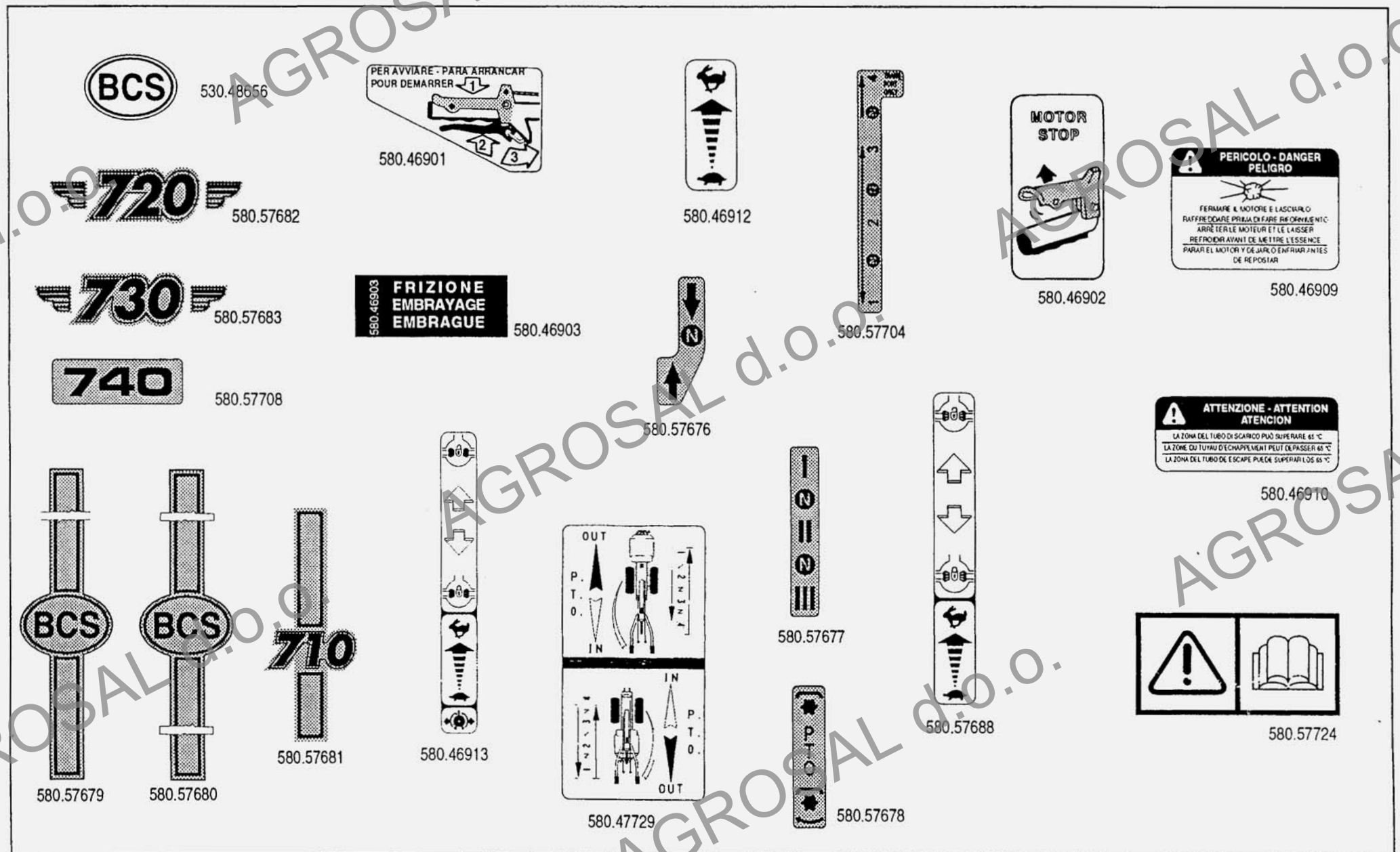

BCS 700 serie 94	ADESIVI ADHESIVOS AUTOCOLLANTS STICKERS AUFKLEBES	DALLA MACCHINA DE LA MAQUINA DE LA MACHINE FROM THE MACHINE AB DER MASCHINE N.		14.00 9/1997

AGROSAL d.o.o.

580.57679

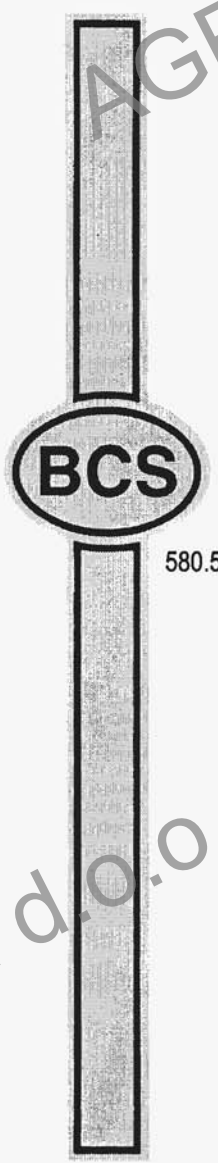

580.57680

580.57682

580.57683

580.57734 ★

580.57681

530.48656

580.57708

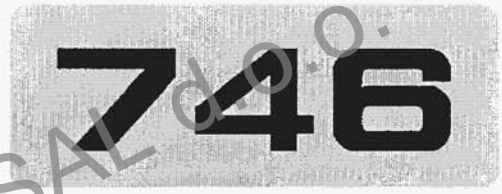

580.57726

BCS	700 serie 94	ADESIVI STICKERS ADHESIVOS AUTOCOLLANTS AUFKLEBES	DALLA MACCHINA DE LA MAQUINA DE LA MACHINE FROM THE MACHINE AB DER MASCHINE ★N.	AGGIORNAMENTO REVISION MISE A JOUR APLAZAMIENTO ANPASSUNG	15 1/2000	Rev. 1

AGROSAL d.o.o.

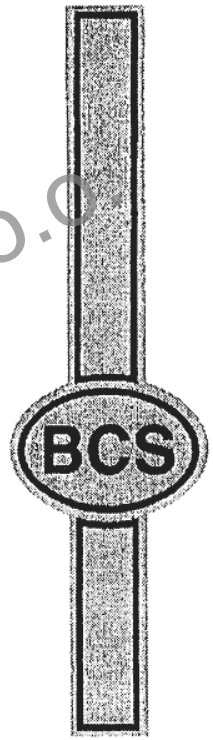

580.57679

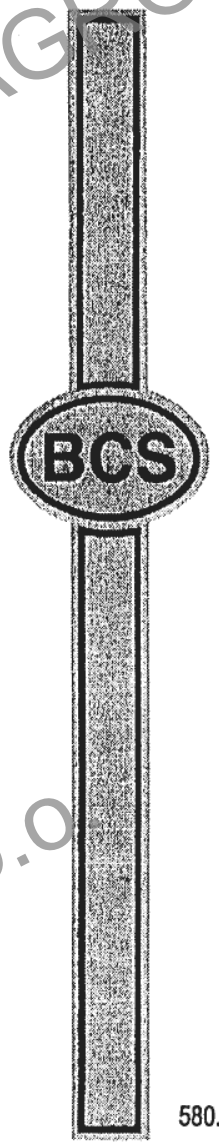

580.57680

580.57682

580.57683

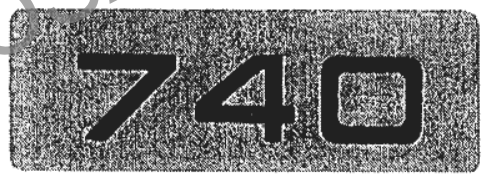

580.57708

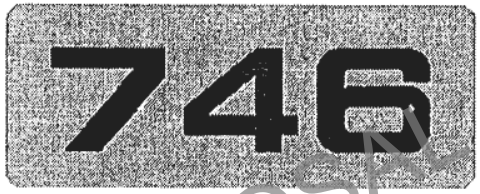

580.57726

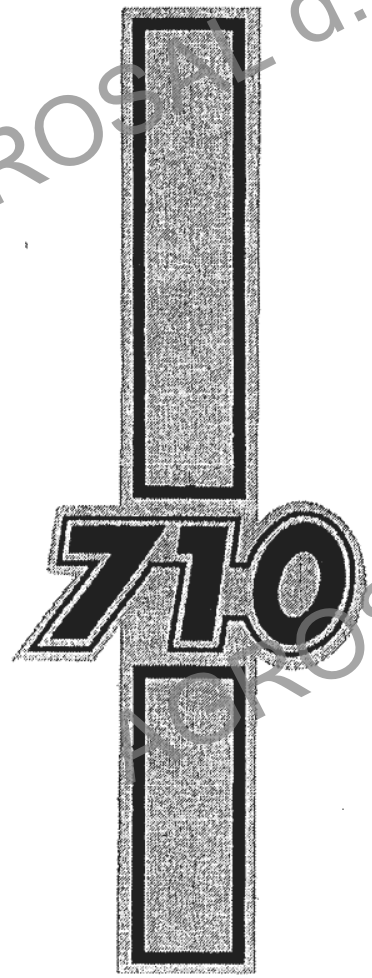

580.57681

530.48656

BCS	700 serie 94	ADESIVI STICKERS ADHESIVOS AUTOCOLLANTS AUFKLEBES	DALLA MACCHINA DE LA MAQUINA DE LA MACHINE FROM THE MACHINE AB DER MASCHINE N.	15	Mod. 00
				9/1999	

AGROSAL d.o.o.